Ford

TRACTOR

PARTS CATALOGUE

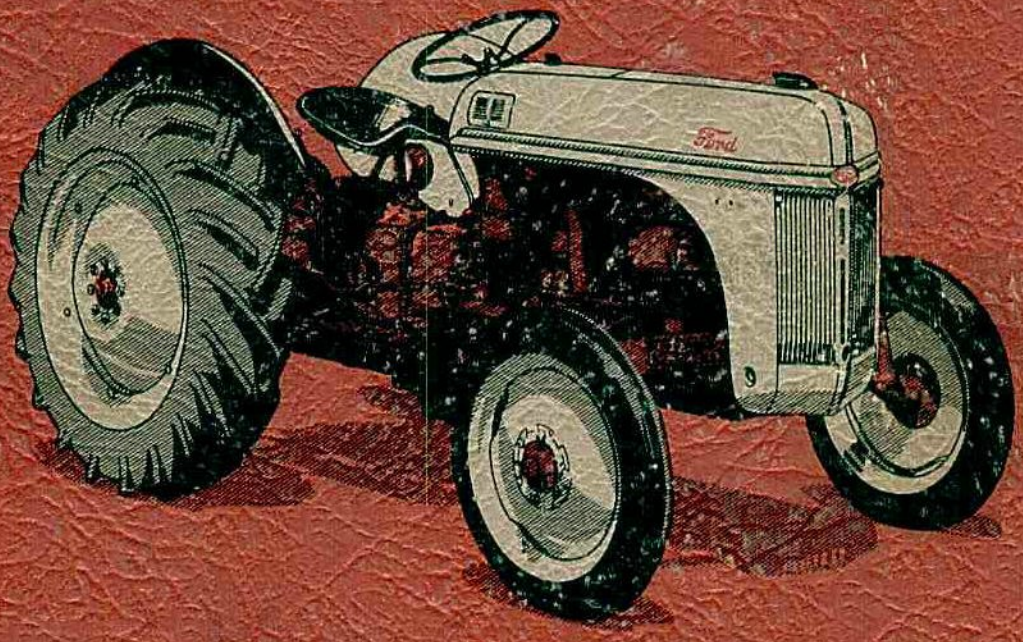

JULY · 1947

Ford Motor Company

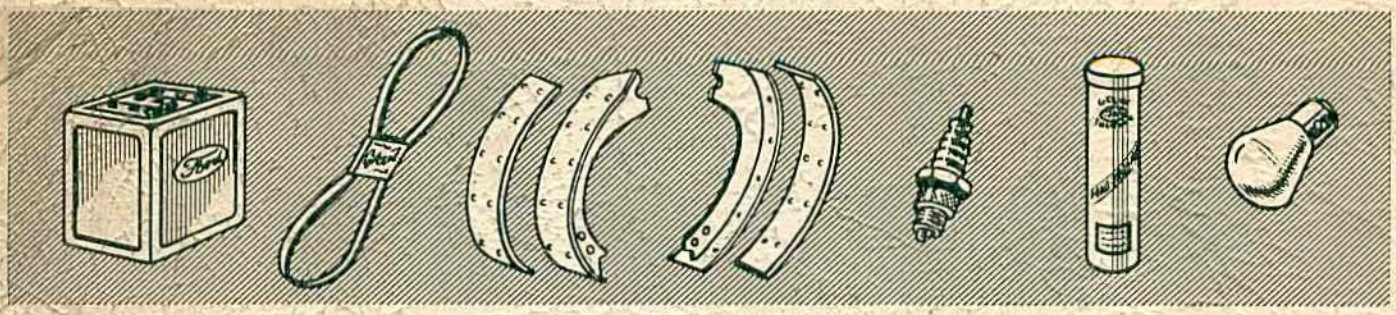

A Complete Stock of Genuine Ford Parts —Is "Important"

Ford Tractors are sold on a basis of "faster—more economical —efficient farming". *They are "Production" Machines—Motive Power Plants.* Delays in their operations, therefore, are expensive to owners and can be a source of serious difficulty not only in machine-time loss, but in crop values as well. This creates a necessity for complete stocks of service parts.

All Genuine Ford Parts are engineered precisely for their particular function and under no circumstance should any substitute be offered to a Ford Tractor owner—not only for reasons of superior performance assured by the use of Genuine Ford Parts, but also because such use of substitutes invalidates the Warranty affecting related genuine parts.

FORD MOTOR COMPANY

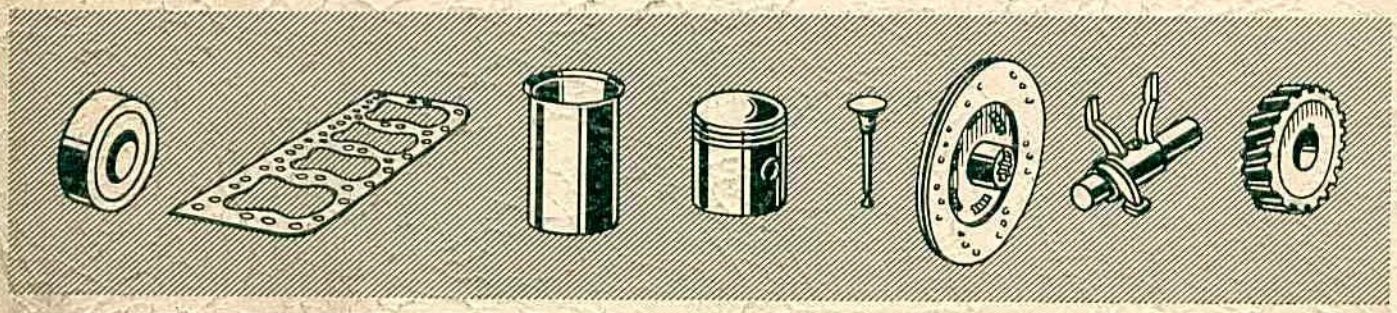

Ford TRACTOR PARTS CATALOGUE

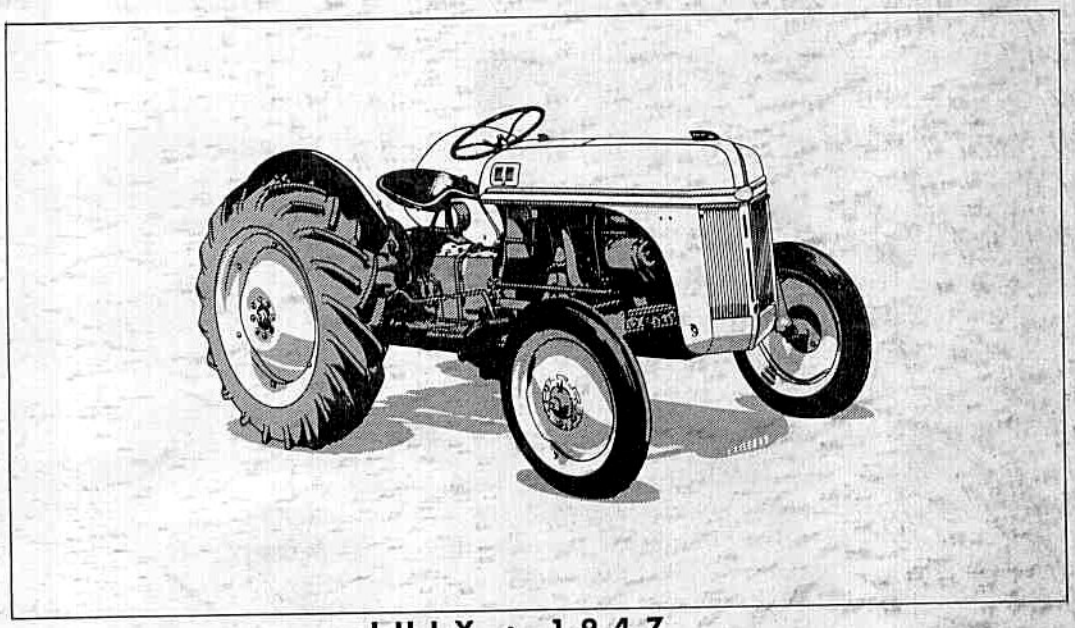

JULY · 1947

Ford Motor Company
DEARBORN, MICHIGAN

COPYRIGHT 1947
FORD MOTOR COMPANY
DEARBORN, MICHIGAN
ALL RIGHTS RESERVED

QUICK REFERENCE INDEX

	PAGE
Hydraulic Lift	6
Power Take Off	15
Wheels, Hubs, Rims	21
Brakes	23
Front Axle	31
Steering Gear	36
Rear Axle	43
Muffler	48
Engine	52
Transmission	58
Clutch	65
Radiator	67
Fuel System	71
Generator	81
Battery	83
Starter and Drive	85
Distributor, Ignition Coil	89
Magneto	91
Lamps and Wiring	93
Running Boards and Fenders	97
Hood	98
Governor	101
Oil Filter	103
Accessories	105
Standard Parts	111
Alphabetical Index	116

FORM 3731

LITHO IN U. S. A.

FORD TRACTOR MODEL IDENTIFICATION

YEAR	MODEL	TYPE
1939 thru 1942	9N	Gasoline
1939 thru 1942	9NAN	Kerosene
1943 thru 1947	2N	Gasoline
1943 thru 1947	2NAN	Kerosene
1948	8N	Gasoline

GENERAL INFORMATION

This Ford Tractor Parts Catalogue has been prepared for ease in identifying and ordering of Ford Tractor Parts.

A complete alphabetical index has been listed at rear of catalogue which lists parts by noun and descriptive names and refers to their exact basic part number.

All parts have been catalogued numerically in accordance with the Ford basic grouping of part numbers with the exception of attaching parts, such as bolts, clips, screws, etc.

Attaching parts such as bolts, nuts, etc. are indented and follow the parts with which they are used. In addition all bolts, nuts, etc. are listed numerically on page 104 and by size on page 111.

All special bolts, nuts, etc. which are other than standard are listed numerically on page 108.

Illustrations throughout this catalogue have basic part numbers only (excluding prefix and suffix). Frequently, a particular illustration may be adaptable to either a previous or later model tractor. For example —should you require a steering wheel for a 1940 tractor, the illustration on Page 34 of the 1939-1947 steering gear shows the basic number of the steering wheel to be 3600, by referring to the 3600 listings (Page 38) you will find 2N-3600 to be the correct steering wheel for all tractors from 1939 through 1947.

Do not order parts by the basic part numbers shown on illustrations, always consult the list of parts for full number.

When ordering parts always give full part number and name of each part, also specify whether shipments are to be made by freight, express or parcel post.

ABBREVIATIONS

ASSY	Assembly	GEN.	Generator
ACCEL.	Accelerator	HYD.	Hydraulic
CARB.	Carburetor	P.T.O.	Power Take Off
CYL.	Cylinder	TRANS.	Transmission
C/PIN	Cotter Pin	R.H.	Right Hand
DIFF.	Differential	L.H.	Left Hand

Ford basic numbers are grouped according to their function, for example all parts applying to the hydraulic lift assembly are grouped from 489 to 698, magneto from 12500 to 12604, etc.

NO. SERIES	GROUP
400-436	Driver's Seat
489-698	Hydraulic Lift
700-762	Power Take-Off
1012-1217	Wheels, Hubs & Rims
2007-2299	Brakes
2304-2796	Brake Controls
3006-3290	Front Axle
3324-3442	Steering Linkage
3503-3699	Steering Gear & Instrument Panel
4010-4668	Rear Axle
5230-5293	Muffler
5370-5375	Drawbar Stays
6010-6766	Engine
7000-7485	Transmission
7503-7609	Clutch
8005-8430	Radiator & Grille
8501-8620	Water Pump, Fan & Fan Belt
8678-8686	Idler

NO. SERIES	GROUP
9002-9292	Fuel Tank, Fuel Lines & Sediment Bulb
9425-9428	Manifolds
9447-9976	Carburetor, Vaporizer & Air Cleaner
10000-10564	Generator
10655-10748	Battery
10850-10931	Heat & Ampere Indicators
11001-11529	Starter
12000-12276	Distributor & Coil
12278-12287	Ignition Wiring
12500-12604	Magneto
14300-14301	Battery Cables
14401-14498	Wiring Assy less Spark Plug Wires
16450-16487	Running Boards
16612-16948	Hood Top & Side Panels
17004-17128	Tools
18179-18204	Governor
18660-18691	Oil Filter

FINISH OF STANDARD PARTS

(BOLTS, SCREWS, NUTS, WASHERS, Etc.)

The "S" suffix on numbers covering Standard Parts represents the finish of the part as shown by the following list:

SUFFIX	FINISH	SUFFIX	FINISH
S	Plain	S15	Oxidized
S2	Raven finish	S16	Lead coated
S3	Black Japan	S18	Case hardened
S4	Raven finish and black paint	S19	Brass plate
S5	Copper plate	S20	Cement coated
S6	Nickel plate	S23	Rustless steel—head polished
S7	Cadmium plate	S24	Hot tin coated
S8	Zinc plate	S32	Ravenized and primed
S10	Tinned	S33	Cyanide harden—raven finish
S12	Lacquer to match trim	S34	Cyanide harden—cadmium plate
S13	Chrome plated		

DECIMAL EQUIVALENTS OF PARTS OF AN INCH

		$\frac{1}{64}$	.015625
	$\frac{1}{32}$		.03125
		$\frac{3}{64}$	.046875
$\frac{1}{16}$			.0625
		$\frac{5}{64}$	.078125
	$\frac{3}{32}$		.09375
		$\frac{7}{64}$	.109375
$\frac{1}{8}$			.125
		$\frac{9}{64}$	.140625
	$\frac{5}{32}$		.15625
		$\frac{11}{64}$	.171875
$\frac{3}{16}$			.1875
		$\frac{13}{64}$	.203125
	$\frac{7}{32}$		.21875
		$\frac{15}{64}$	.234375
$\frac{1}{4}$			.25
		$\frac{17}{64}$	.265625
	$\frac{9}{32}$		.28125
		$\frac{19}{64}$	.296875
$\frac{5}{16}$			.3125
		$\frac{21}{64}$	.328125
	$\frac{11}{32}$		.34375
		$\frac{23}{64}$	.359375
$\frac{3}{8}$			.375
		$\frac{25}{64}$	.390625
	$\frac{13}{32}$		.40625
		$\frac{27}{64}$	.421875
$\frac{7}{16}$			.4375
		$\frac{29}{64}$	.453125
	$\frac{15}{32}$		.46875
		$\frac{31}{64}$	.484375
$\frac{1}{2}$			.5

		$\frac{33}{64}$	.515625
	$\frac{17}{32}$		.53125
		$\frac{35}{64}$	.546875
$\frac{9}{16}$			.5625
		$\frac{37}{64}$	.578125
	$\frac{19}{32}$		.59375
		$\frac{39}{64}$	.609375
$\frac{5}{8}$			.625
		$\frac{41}{64}$	.640625
	$\frac{21}{32}$		.65625
		$\frac{43}{64}$	.671875
$\frac{11}{16}$			.6875
		$\frac{45}{64}$	.703125
	$\frac{23}{32}$		.71875
		$\frac{47}{64}$	.734375
$\frac{3}{4}$			.75
		$\frac{49}{64}$	.765625
	$\frac{25}{32}$		.78125
		$\frac{51}{64}$	.796875
$\frac{13}{16}$			.8125
		$\frac{53}{64}$	.828125
	$\frac{27}{32}$		.84375
		$\frac{55}{64}$	.859375
$\frac{7}{8}$			.875
		$\frac{57}{64}$	.890625
	$\frac{29}{32}$		.90625
		$\frac{59}{64}$	.921875
$\frac{15}{16}$			.9375
		$\frac{61}{64}$	.953125
	$\frac{31}{32}$		.96875
		$\frac{63}{64}$	.984375
1			1.

400 ASS'Y

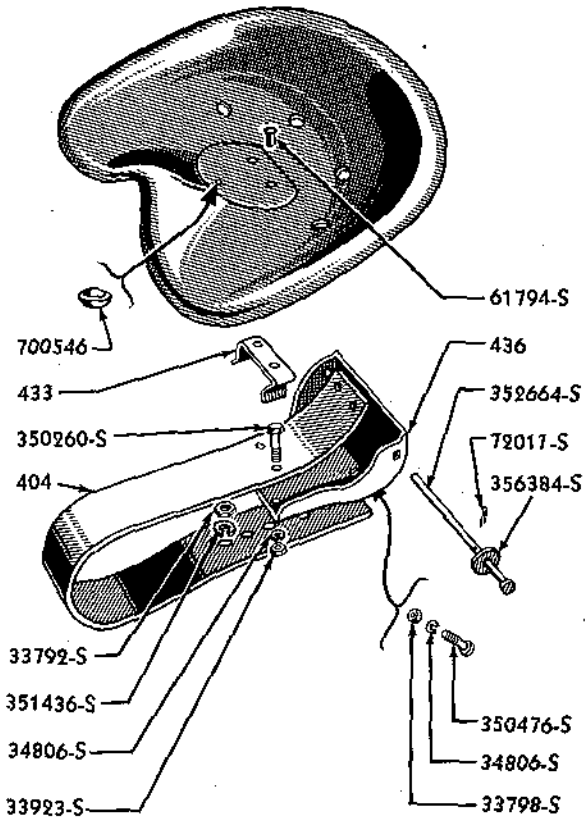

TP-20

1948 DRIVERS SEAT AND RELATED PARTS

Basic numbers only shown on illustration. Order by Part Numbers shown in list of parts.

PART NUMBER	PART NAME		NO. REQ'D	MODEL	YEAR 19__
	Driver's Seat				
9N 400-A	Seat assy (driver's)-welded-optional with 9N-400-C-D		1	9N, 9NAN, 2N, 2NAN	39-47
9N 400-C	Seat assy (driver's)-riveted-optional with 9N-400-A-D		1	9N, 9NAN, 2N, 2NAN	39-47
9N 400-D	Seat assy (driver's)-welded-optional with 9N-400-A-C		1	9N, 9NAN, 2N, 2NAN	39-47
8N 400-A	Seat assy (driver's)		1	8N	48
	352664-S7	Pin (seat hinge)	1	8N	48
	356384-S7	Washer (seat hinge)-flat	1	8N	48
	72017-S7	Cotter pin (seat hinge)	1	8N	48
	350617-S7	Bolt (driver's seat to spring)-carriage-7/16"-20	1	9N, 9NAN, 2N, 2NAN	39-47
	33792-S7	Nut (driver's seat to spring)-7/16"-20	1	9N, 9NAN, 2N, 2NAN	39-47
	351436-S	Lockwasher (driver's seat to spring)-7/16"	1	9N, 9NAN, 2N, 2NAN	39-47

Ford

TRACTOR PARTS CATALOGUE

PART NUMBER	PART NAME	NO. REQ'D	MODEL	YEAR 19___
9N 404	Spring (driver's seat)-31.12" x 3"	1	9N, 9NAN, 2N, 2NAN	39-47
8N 404	Spring (driver's seat)-29.18" x 3"	1	8N	48
	88383-S7 Stud (seat spring to hydraulic lift cover)-7/16"-14 & 7/16"-20 x 1 3/8"-screw	2	9N, 9NAN, 2N, 2NAN, 8N	39-48
	33792-S7 Nut (spring to cover)-7/16"-20	2	9N, 9NAN, 2N, 2NAN, 8N	39-48
	351436-S Lockwasher (spring to cover)-7/16"	2	9N, 9NAN, 2N, 2NAN, 8N	39-48
8N 433	Clip (driver's seat to spring)	1	8N	48
	61794-S Rivet (clip to seat)	2	8N	48
	40-700546-A Bumper (seat to spring)	1	8N	48
8N 436	Plate (driver's seat hinge)	1	8N	48
	350476-S7 Bolt (seat hinge plate to spring)	2	8N	48
	33798-S7 Nut (seat hinge plate to spring)	2	8N	48
	350260-S7 Bolt (seat hinge plate to spring)	2	8N	48
	33923-S7 Nut (seat hinge plate to spring)	2	8N	48
	34806-S7 Lockwasher (seat hinge plate to spring)	4	8N	48

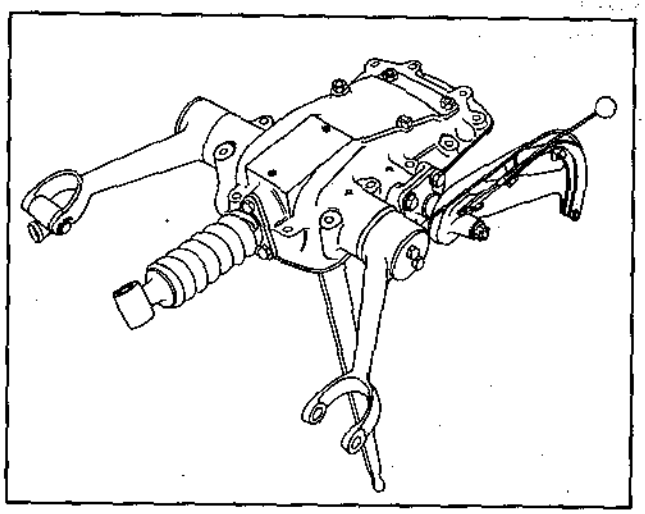

500 ASS'Y

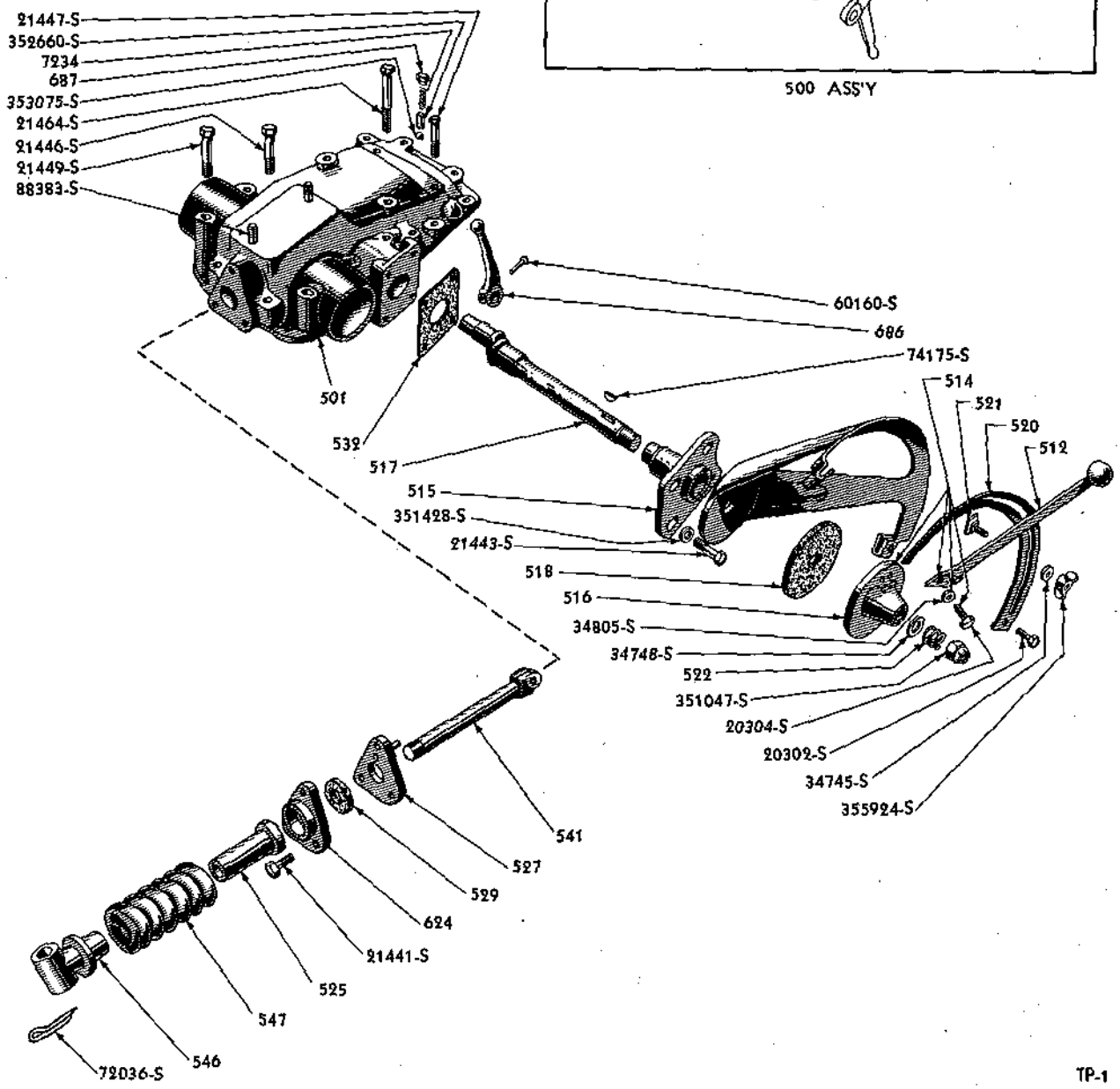

TP-1

1948 HYDRAULIC LIFT COVER AND RELATED PARTS

Basic numbers only shown on illustration. Order by Part Numbers shown in list of parts.

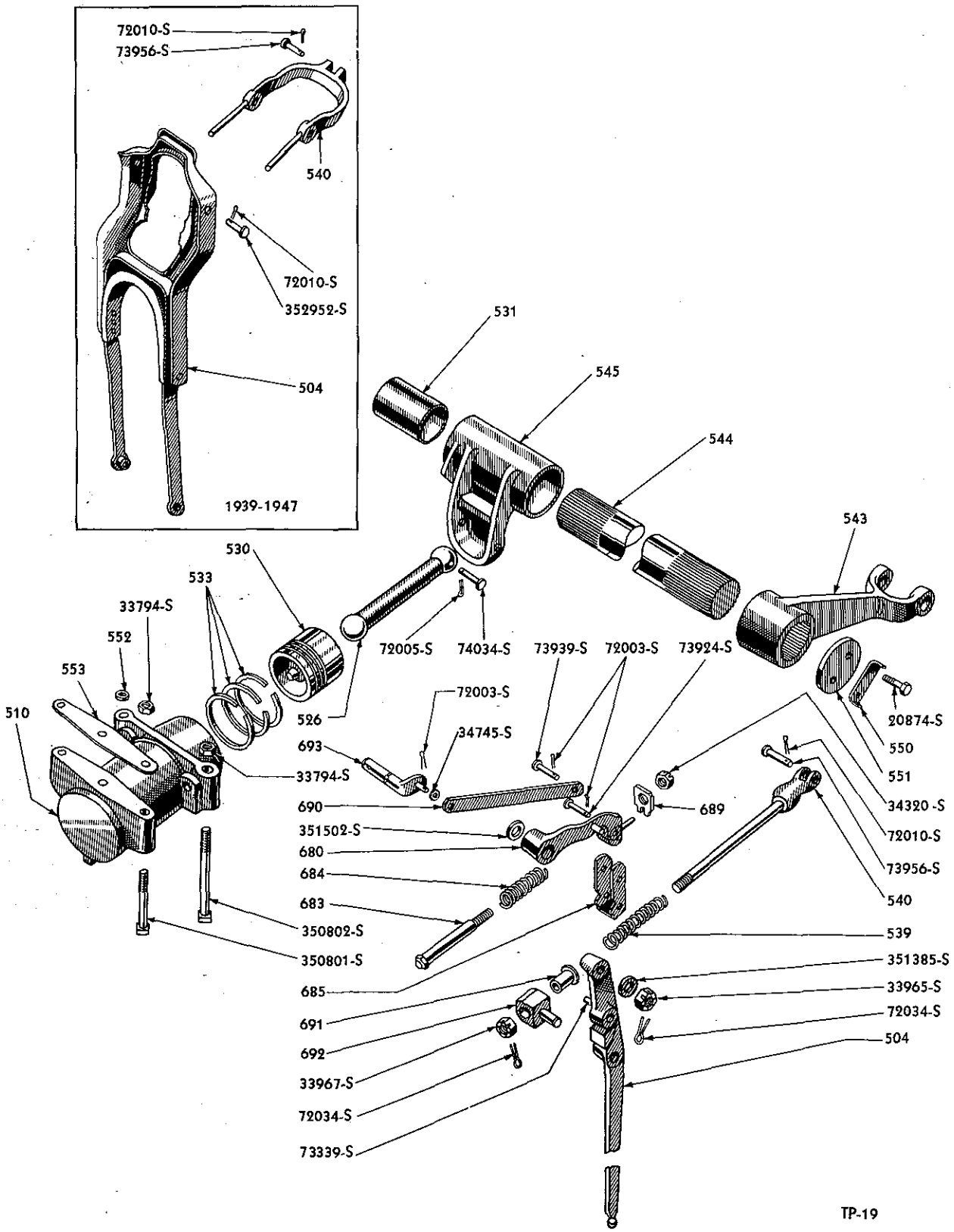

1948 HYDRAULIC LIFT SHAFT AND RELATED PARTS

Basic numbers only shown on illustration. Order by Part Numbers shown in list of parts.

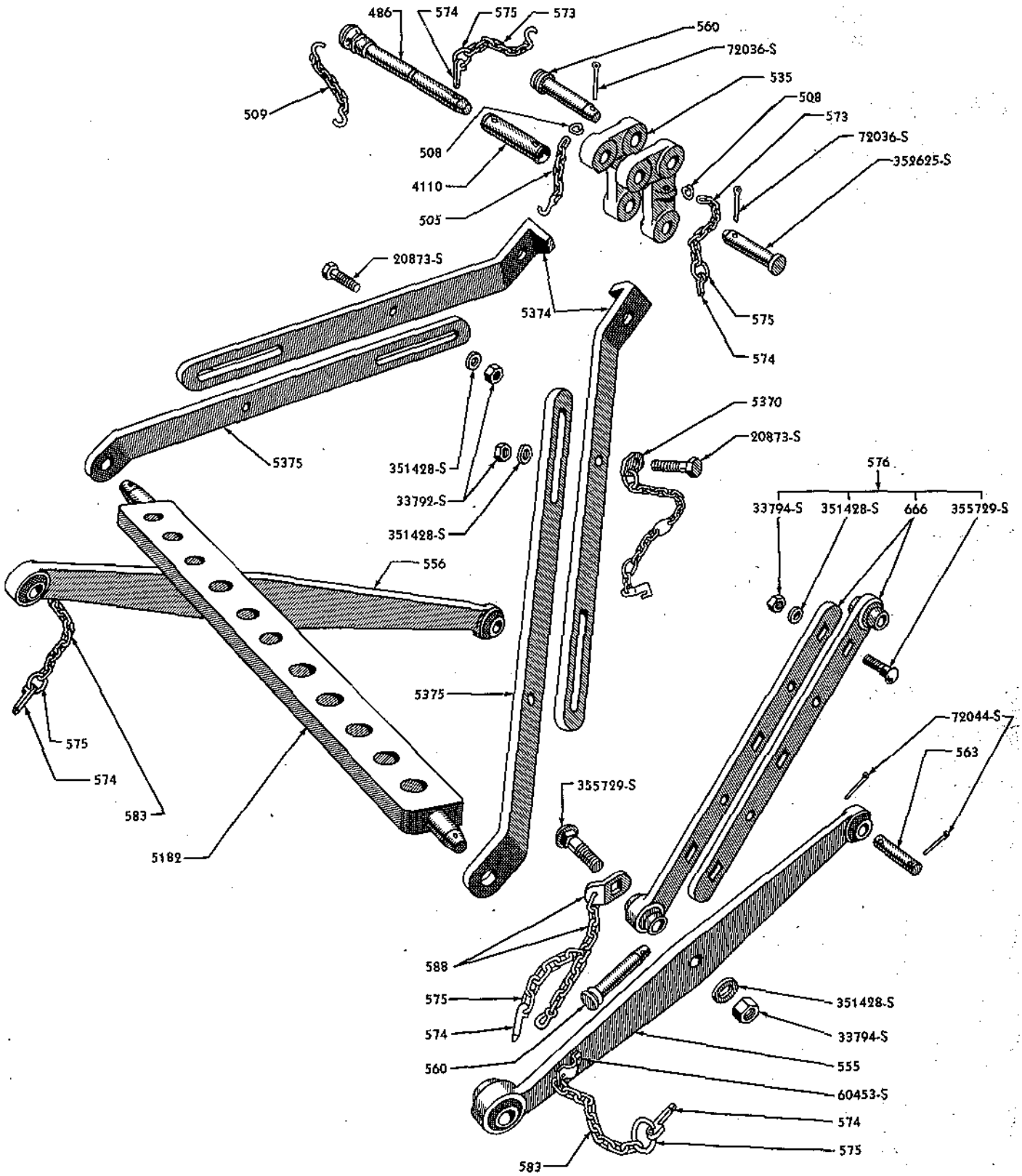

TP-3.

1948 HYDRAULIC LIFT LINKS AND RELATED PARTS

Basic numbers only shown on illustration. Order by Part Numbers shown in list of parts.

Ford

TRACTOR PARTS CATALOGUE

Hydraulic Lift

PART NUMBER	PART NAME	NO. REQ'D	MODEL	YEAR 19__
8N 486	Pin (yoke)-9.86" x .750"	1	8N	48
9N 489	Kit (hydraulic lift yoke and plunger)-Consists of the following 1-9N 541-C Plunger 1-9N 546-C Yoke	1	9N, 9NAN, 2N, 2NAN	39-47
9N 500	Lift assy (hydraulic)	1	9N, 9NAN, 2N, 2NAN	39-47
8N 500	Lift assy (hydraulic)	1	8N	48
9N 501	Cover (hydraulic lift housing)-without drawbar control lever	1	9N, 9NAN, 2N, 2NAN	39-47
8N 501	Cover (hydraulic lift housing)-with drawbar control lever	1	8N	48
	21446-S7 Bolt (hydraulic lift cover to housing)-7/16"-14 x 2.50"	3	9N, 9NAN, 2N, 2NAN, 8N	39-48
	21447-S7 Bolt (hydraulic lift cover to housing)-7/16"-14 x 1.50"	7	9N, 9NAN, 2N, 2NAN, 8N	39-48
	21449-S7 Bolt (hydraulic lift cover to housing)-7/16"-14 x 3.625"	4	9N, 9NAN, 2N, 2NAN, 8N	39-48
	21464-S7 Bolt (hydraulic lift cover to center housing)-7/16"-14 x 3.31"	1	9N, 9NAN, 2N, 2NAN, 8N	39-48
9N 502	Gasket (hydraulic lift housing cover)	1	9N, 9NAN, 2N, 2NAN, 8N	39-48
9N 504-B	Fork assy (hand lift control)	1	9N, 9NAN, 2N, 2NAN	39-47
	352547-S Pin (top fork to bottom fork)-clevis-.247" x .98"	2	9N, 9NAN, 2N, 2NAN	39-47
	72003-S Cotter pin (top fork to bottom fork clevis pin)-1/16" x 1/2"	2	9N, 9NAN, 2N, 2NAN	39-47
8N 504	Lever assy (hand lift control)	1	8N	48
	73339-S Pin (hydraulic lift hand control lever assy)-dowel	1	8N	48
9N 505	Chain assy (upper links linch pin)	1	9N, 9NAN, 2N, 2NAN, 8N	39-48
9N 508-B	Anchor (upper links linch pin chain)		Refer to Implement Stabilizer Group	
9N 510-A	Cylinder (hydraulic lift)-use with 9N-547-A adjusting spring	1	9N, 9NAN before Serial 47,020, 2N, 2NAN, 8N	39-48
	350801-S7 Bolt (hydraulic cylinder to cover)	2	8N	48
	350802-S7 Bolt (hydraulic cylinder to cover)	2	8N	48
	33794-S7 Nut (hydraulic cylinder to cover)	4	8N	48
9N 510-B	Cylinder (hydraulic lift)-use with 9N-547-B adjusting spring	1	9N, 9NAN after Serial 47,019, 2N, 2NAN	39-47
2N 512	Lever assy (hydraulic lift)	1	9N, 9NAN, 2N, 2NAN	39-47
	34805-S7 Lockwasher (control lever to friction plate)-1/4"	2	2N, 2NAN	45-47
	20304-S7 Bolt (control lever to friction plate)-hex head-1/4"-20 x 7/16"	2	2N, 2NAN	45-47
2N 514	Plate and control lever assy (friction)	1	2N, 2NAN, 8N	42-48
	20304-S7 Bolt (hydraulic lift lever to friction plate)	2	9N, 9NAN, 2N, 2NAN, 8N	39-48
	34805-S7 Lockwasher (lever to plate)	2	9N, 9NAN, 2N, 2NAN, 8N	39-48
9N 515-A	Quadrant assy (hydraulic lift control)-9" outer quadrant rim to tube end	1	9N, 9NAN, 2N, 2NAN	39-47
	351428-S7 Washer (quadrant to hydraulic lift housing cover)-flat-7/16"	4	9N, 9NAN, 2N, 2NAN	39-47
	21443-S7 Bolt (quadrant to hydraulic lift housing cover)-hex head-7/16"-14 x .94"	4	9N, 9NAN, 2N, 2NAN	39-47

Ford

TRACTOR PARTS CATALOGUE

PART NUMBER	PART NAME	NO. REQ'D	MODEL	YEAR 19__
8N 515	Quadrant assy (hydraulic lift control)	1	8N	48
2N 516	Plate (hydraulic lift control quadrant friction)	1	9N, 9NAN, 2N, 2NAN, 8N	39-48
9N 517	Shaft (hydraulic lift control lever)-10.62" long	1	9N, 9NAN, 2N, 2NAN	39-47
8N 517	Shaft (hydraulic lift control lever)-9.25" long	1	8N	48
	74175-S Key (control arm to shaft)-Woodruff-5/32" x 5/8"	1	9N, 9NAN, 2N, 2NAN, 8N	39-48
9N 518	Disc (lever assy to quadrant)-friction	1	9N, 9NAN, 2N, 2NAN, 8N	39-48
9N 520	Retainer (control lever)	1	9N, 9NAN, 2N, 2NAN, 8N	39-48
	20302-S7 Bolt (retainer to quadrant)-hex head-5/16"-18 x 3/8"	2	9N, 9NAN, 2N, 2NAN, 8N	39-48
9N 521	Stop assy (lever retainer)	1	9N, 9NAN, 2N, 2NAN, 8N	39-48
	34745-S7 Washer (control lever stop)-flat-1/4"	1	9N, 9NAN, 2N, 2NAN, 8N	39-48
	355924-S7 Nut-wing-1/4"-28	1	9N, 9NAN, 2N, 2NAN, 8N	39-48
9N 522	Washer (lever to shaft)-spring	1	9N, 9NAN, 2N, 2NAN, 8N	39-48
	34748-S7 Washer (lever to shaft)-flat-7/16"	1	9N, 9NAN, 2N, 2NAN, 8N	39-48
	33817-S7 Nut (lever to shaft)-hex-slotted-7/16"-20	1	9N, 9NAN, 2N, 2NAN	39-47
	72026-S7 Cotter pin (lever to shaft) 1/8" x 7/8"	1	9N, 9NAN, 2N, 2NAN	39-47
	351502-S Washer (hydraulic control shaft to hydraulic friction plate)	1	8N	48
	351047-S7 Locknut (hydraulic control shaft to hydraulic friction plate)	1	8N	48
	351385-S7 Washer (hydraulic hand control lever assy to control shaft)	1	8N	48
	33965-S7 Nut (hydraulic hand control lever assy to control shaft)-castle	1	8N	48
	72034-S7 Cotter pin (hydraulic hand control lever assy to control shaft)	1	8N	48
9N 523-B	Gasket (lower link support plate)-square end	2	9N, 9NAN, 2N, 2NAN	39-47
9N 525-B	Seat (hydraulic lift draft control spring adjusting)	1	9N, 9NAN, 2N, 2NAN, 8N	39-48
9N 526	Rod (ram arm to hydraulic lift piston connecting)	1	9N, 9NAN, 2N, 2NAN, 8N	39-48
	74034-S Pin (connecting rod to ram arm)-clevis	1	8N	48
	72005-S Cotter pin	1	8N	48
9N 527	Plate (hand lift cover)-without pin riveted in place	1	9N, 9NAN, 2N, 2NAN	39-47
8N 527	Plate assy (hand lift cover)-with pin riveted in place	1	8N	48
9N 529	Felt (hydraulic lift draft control spring seat)	1	9N, 9NAN, 2N, 2NAN, 8N	39-48
9N 530	Piston (hydraulic lift)	1	9N, 9NAN, 2N, 2NAN, 8N	39-48
9N 531	Bushing (hydraulic lift shaft)-2.995" x 2.370" O.D. x 2.001" I.D.	2	9N, 9NAN, 2N, 2NAN, 8N	39-48
9N 532	Gasket (quadrant to cover)	1	9N, 9NAN, 2N, 2NAN, 8N	39-48
9N 533	Ring (hydraulic lift piston)	3	9N, 9NAN, 2N, 2NAN, 8N	39-48
9N 535	Rocker (hydraulic lift)-with 49/64" anchor hole	1	9N, 9NAN, 2N, 2NAN	39-47
8N 535	Rocker (hydraulic lift)-with 1 1/64" anchor hole	1	8N	48
	72036-S7 Cotter pin (rocker to 9N-546-C yoke)	2	8N	48
9N 539	Spring (hydraulic fork retraction)-4.88" free length -.62" O.D.	1	9N, 9NAN, 2N, 2NAN	39-47
8N 539	Spring (draft control)-4.60" free length-.75" O.D.	1	8N	48

Ford

TRACTOR PARTS CATALOGUE

PART NUMBER	PART NAME	NO. REQ'D	MODEL	YEAR 19
9N 540	Fork (spring control)	1	9N, 9NAN, 2N, 2NAN	39-47
	352592-S Pin (spring control fork to hand control fork)-clevis 3/8" x 1 1/4"	2	9N, 9NAN, 2N, 2NAN	39-47
	73956-S7 Pin (spring control fork to plunger)-clevis-3/8" x 1 7/16"	1	9N, 9NAN, 2N, 2NAN	39-47
	72010-S7 Cotter pin-1/8" x 5/8"	3	9N, 9NAN, 2N, 2NAN	39-47
8N 540	Link assy (connecting draft control)	1	8N	48
	73956-S7 Pin (hydraulic lift plunger to link)-clevis	1	8N	48
	72010-S7 Cotter pin	1	8N	48
9N 541-C	Plunger (hydraulic lift draft control spring)-use only with 9N-546-C	1	9N, 9NAN, 2N, 2NAN	39-47
8N 541	Plunger (hydraulic lift draft control spring)	1	8N	48
9N 543	Arm (hydraulic lift shaft)	2	9N, 9NAN, 2N, 2NAN, 8N	39-48
9N 544	Shaft (hydraulic lift)	1	9N, 9NAN, 2N, 2NAN, 8N	39-48
9N 545	Ram arm (hydraulic lift shaft)	1	9N, 9NAN, 2N, 2NAN	39-47
	74034-S Pin (connecting rod to ram arm)-clevis 5/16" x 2-1/8"	1	9N, 9NAN, 2N, 2NAN	39-47
	72005-S Cotter pin-1/8" x 1/2"	1	9N, 9NAN, 2N, 2NAN	39-47
8N 545	Arm (hydraulic lift ram)	1	8N	48
	20874-S7 Bolt (arm to shaft)-hex head-7/16"-20 x .88"	4	9N, 9NAN, 2N, 2NAN, 8N	39-48
9N 546-C	Yoke (control spring)-use only with 9N-541-C or 8N-541	1	9N, 9NAN, 2N, 2NAN, 8N	39-48
9N 547-A	Spring (hydraulic lift draft control)-5.570" free length x 1.125" I.D. x 2.31" O.D.	1	9N, 9NAN before Serial 47,020	39-40
9N 547-B	Spring (hydraulic lift draft control)-5.570" free length x 1.125" I.D. x 2.44" O.D.	1	9N, 9NAN, 2N, 2NAN, 8N after Serial 47,019	40-48
9N 550	Lockwasher (hydraulic lift)	2	9N, 9NAN, 2N, 2NAN, 8N	39-48
	20874-S7 Bolt (hydraulic lift shaft end plate)-7/16"-20 x .68"-hex head	2	9N, 9NAN, 2N, 2NAN, 8N	39-48
9N 551	Washer (arm to shaft)	2	9N, 9NAN, 2N, 2NAN, 8N	39-48
9N 552	Gasket (hydraulic cylinder to center housing cover)-15/32" I.D.-1" O.D.	2	9N, 9NAN, 2N, 2NAN, 8N	39-48
9N 553	Gasket (hydraulic cylinder to center housing cover)-4.12" in length	1	9N, 9NAN, 2N, 2NAN, 8N	39-48
9N 554	Bearing assy (leveling gear)	1	9N, 9NAN, 2N, 2NAN, 8N	39-48
9N 555	Link assy (hydraulic lower lift)-RH	1	9N, 9NAN, 2N, 2NAN, 8N	39-48
	9N-5182 Drawbar	1	9N, 9NAN, 2N, 2NAN, 8N	39-48
9N 556	Link assy (hydraulic lower lift)-LH	1	9N, 9NAN, 2N, 2NAN, 8N	39-48
	2N-574 Pin (linch)	2	9N, 9NAN, 2N, 2NAN, 8N	39-48
	2N-575 Ring (linch pin locking)	2	9N, 9NAN, 2N, 2NAN, 8N	39-48
9N 560	Pin (upper link to rocker)	2	9N, 9NAN, 2N, 2NAN, 8N	39-48
9N 562-B	Plate (lower link support)	2	9N, 9NAN, 2N, 2NAN	39-47
	357701-S7 Stud-7/16"-14 & 7/16"-20 x 1 3/4"	2	9N, 9NAN, 2N, 2NAN	39-47
	33792-S7 Nut-hex-7/16"-20	2	9N, 9NAN, 2N, 2NAN	39-47
9N 563	Shaft (lower link support)	2	9N, 9NAN, 2N, 2NAN	39-47
	356087-S7 Nut-self locking-5/8"-18	2	9N, 9NAN, 2N, 2NAN	39-47
	33860-S7 Nut-5/8"-18-hex	2	9N, 9NAN, 2N, 2NAN	39-47
	72026-S7 Cotter pin-1/8" x 7/8"	2	9N, 9NAN, 2N, 2NAN	39-47
8N 563	Shaft (lower link support)	2	8N	48
	72044-S Cotter pin-1/8" x 1 1/4"	4	8N	48

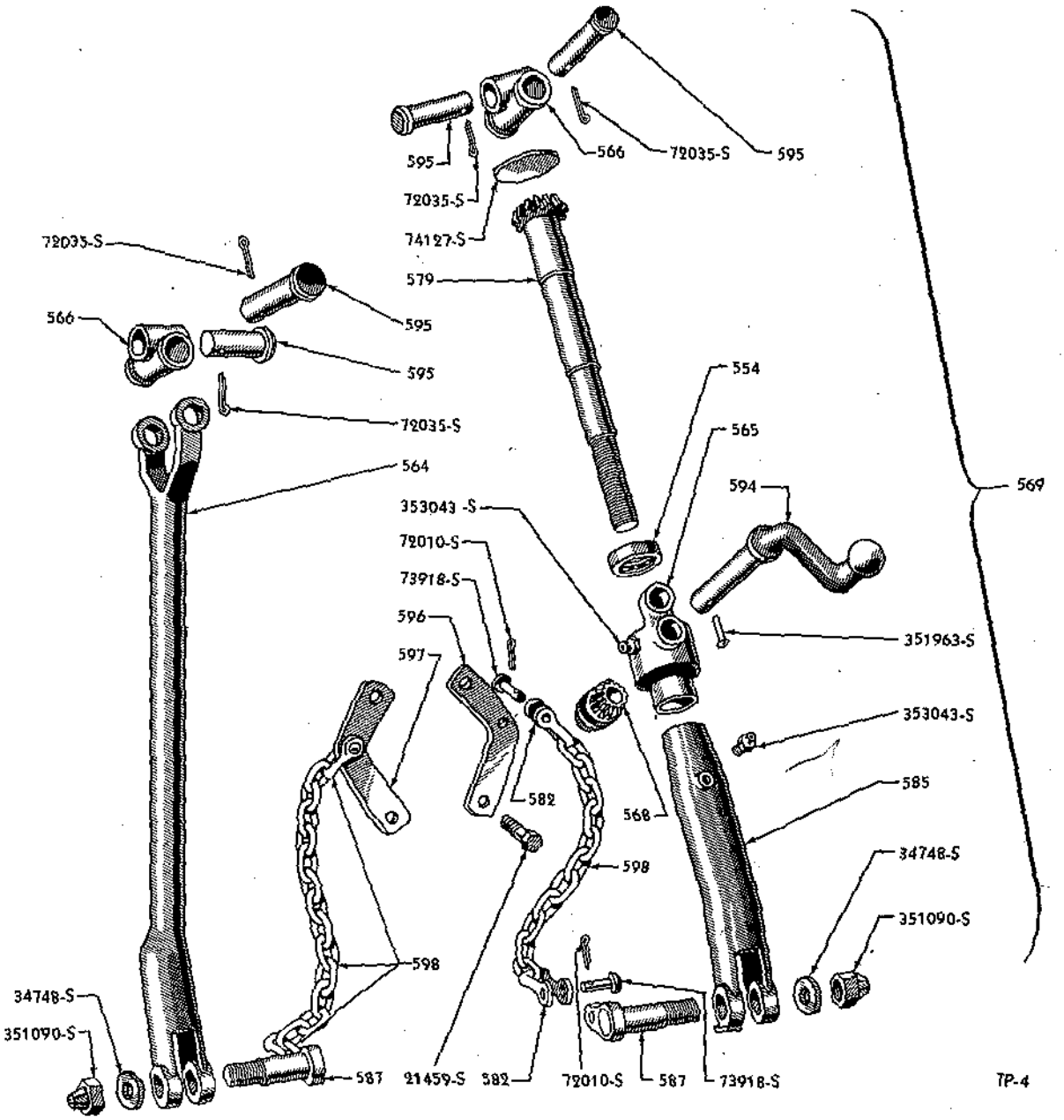

1939-48 LEVELING BOX ASS'Y. AND RELATED PARTS

Basic numbers only shown on illustration. *Order by Part Numbers shown in list of parts.*

PART NUMBER	PART NAME	NO. REQ'D	MODEL	YEAR 19__
9N 564	Rod (hydraulic lift leveling)-LH	1	9N, 9NAN, 2N, 2NAN, 8N	39-48
9N 565	Box (leveling gear)	1	9N, 9NAN, 2N, 2NAN, 8N	39-48
	74127-S Plug-expansion-1-3/4"-pressed into 9N 565	1	9N, 9NAN, 2N, 2NAN, 8N	39-48
9N 566	Knuckle (leveling box to hydraulic lift arm)	1	9N, 9NAN, 2N, 2NAN, 8N	39-48
9N 566	Knuckle (rod to hydraulic lift arm)	1	9N, 9NAN, 2N, 2NAN, 8N	39-48
9N 567	Tube (center housing oil)	1	9N, 9NAN, 2N, 2NAN, 8N	39-48
9N 568	Gear (hydraulic lever leveling)	1	9N, 9NAN, 2N, 2NAN, 8N	39-48

Ford

TRACTOR PARTS CATALOGUE

PART NUMBER	PART NAME	NO. REQ'D	MODEL	YEAR 19—
9N 569	Box assy (hydraulic lift leveling)	1	9N, 9NAN, 2N, 2NAN, 8N	39-48
9N 573-B	Chain (upper linch pin)	1	9N, 9NAN, 2N, 2NAN, 8N	39-48
2N 574	Pin (linch)	4	9N, 9NAN, 2N, 2NAN, 8N	39-48
2N 574	Pin (linch)		Refer to 9N-556	
2N 575	Ring (linch pin locking)	4	9N, 9NAN, 2N, 2NAN, 8N	39-48
2N 575	Ring (linch pin locking)		Refer to 9N-556	
2N 576-B	Link assy (upper)	1	9N, 9NAN, 2N, 2NAN, 8N	39-48
	355729-S7 Bolt-oval head-7/16"-20 x 1-1/2"	3	9N, 9NAN, 2N, 2NAN, 8N	39-48
	351428-S7 Washer (upper link bolt)-flat	3	9N, 9NAN, 2N, 2NAN, 8N	39-48
	33794-S34 Nut (upper link bolt)-hex-7/16"	3	9N, 9NAN, 2N, 2NAN, 8N	39-48
9N 579	Shaft (leveling gear)	1	9N, 9NAN, 2N, 2NAN, 8N	39-48
9N 582	Clevis (leveling box assy)	4	9N, 9NAN, 2N, 2NAN, 8N	39-48
	73918-S7 Pin-clevis-5/16"-1-1/8"	4	9N, 9NAN, 2N, 2NAN, 8N	39-48
	72010-S7 Cotter pin-1/8" x 5/8"	4	9N, 9NAN, 2N, 2NAN, 8N	39-48
9N 583-A	Clip and chain assy (lower link linch pin)-9 links	2	9N, 9NAN	39-41
9N 583-B	Clip and chain assy (lower link linch pin)-8 links	2	2N, 2NAN, 8N	42-48
9N 585	Fork (hydraulic lift rod)-RH-10.36" long-straight	1	9N, 9NAN, 2N, 2NAN, 8N	39-48
	353043-AS7 Fitting (gear box and fork)-lubricator-1/4"-28	2	9N, 9NAN, 2N, 2NAN, 8N	39-48
9N 587-B	Bolt (check chain)-eye	2	9N, 9NAN, 2N, 2NAN, 8N	39-48
	351090-S7 Nut-hex-7/16"-20	2	9N, 9NAN, 2N, 2NAN, 8N	39-48
9N 588	Chain and anchor assy (upper link)	1	9N, 9NAN, 2N, 2NAN, 8N	39-48
9N 594	Lever (gear and shaft operating)	1	9N, 9NAN, 2N, 2NAN, 8N	39-48
	351963-S Rivet (lever to box)-oval disc-3/16" x .94"	1	9N, 9NAN, 2N, 2NAN, 8N	39-48
9N 595	Pin (knuckle to leveling box)-3.30" x 8.25" O.D.-3/16" drilled	1	9N, 9NAN, 2N, 2NAN, 8N	39-48
9N 595	Pin (knuckle to hydraulic lift arm)-3.30" x 8.25" O.D.-3/16" drilled	1	9N, 9NAN, 2N, 2NAN, 8N	39-48
9N 595	Pin (knuckle to hydraulic lift)-3.30" x 8.25" O.D.-3/16" drilled	1	9N, 9NAN, 2N, 2NAN, 8N	39-48
9N 595	Pin (knuckle to leveling rod)-3.30" x 8.25" O.D.-3/16" drilled	1	9N, 9NAN, 2N, 2NAN, 8N	39-48
	72035-S7 Cotter pin-1/8" x 1"	4	9N, 9NAN, 2N, 2NAN, 8N	39-48
9N 596	Anchor (lower link check chain)-RH	1	9N, 9NAN, 2N, 2NAN, 8N	39-48
9N 597	Anchor (lower link check chain)-LH	1	9N, 9NAN, 2N, 2NAN, 8N	39-48
	21459-S7 Bolt (anchor to center housing)-hex head-7/16"-14 x 1-5/8"	4	9N, 9NAN, 2N, 2NAN, 8N	39-48
9N 598	Chain and clevis assy (lower link anchor)-10.75"long	2	9N, 9NAN, 2N, 2NAN, 8N	39-48
	73918-S7 Pin-clevis-5/16" x 1-1/8"	4	9N, 9NAN, 2N, 2NAN, 8N	39-48
	72010-S7 Cotter pin-1/8" x 5/8"	4	9N, 9NAN, 2N, 2NAN, 8N	39-48

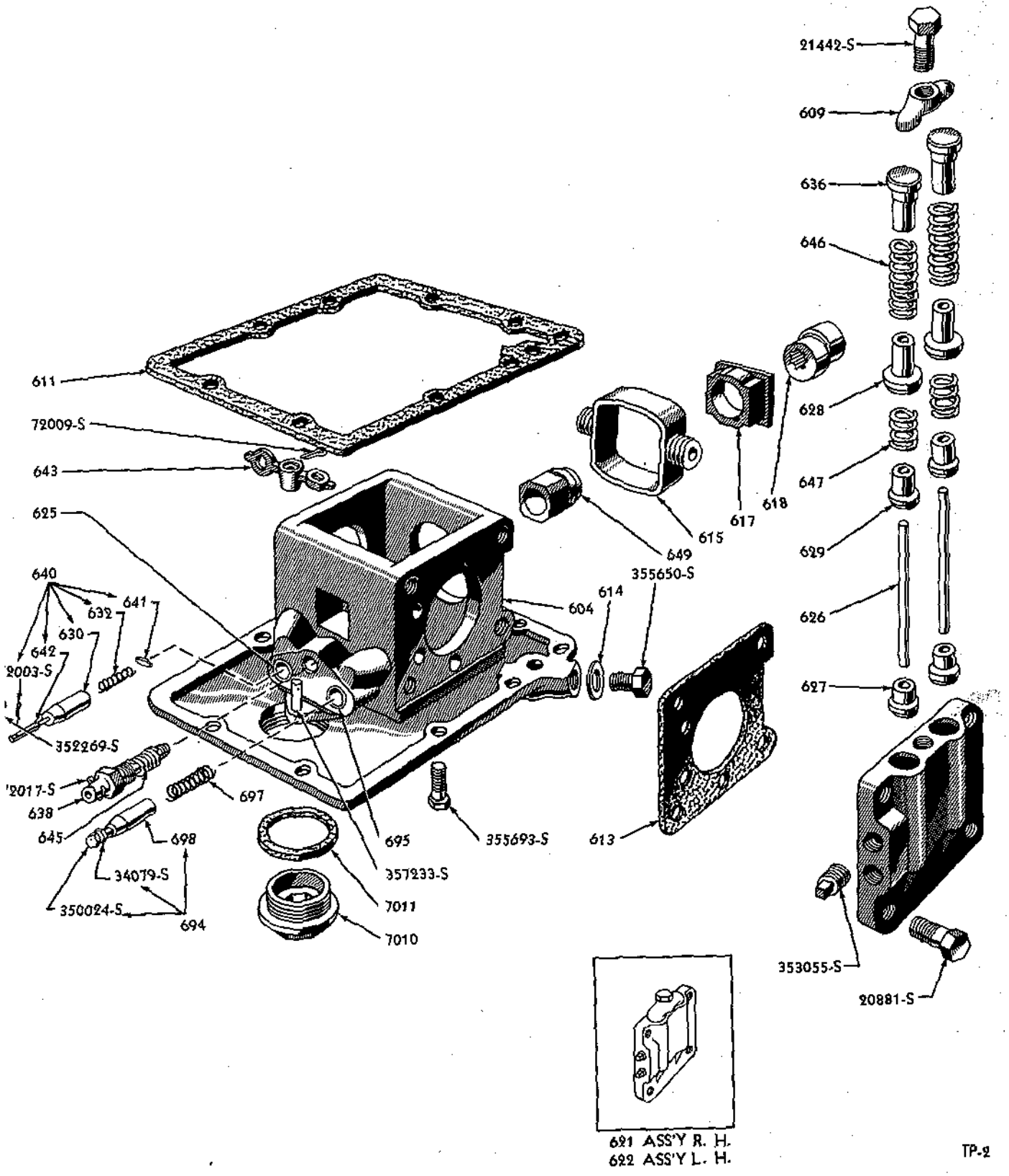

TP-2

1948 HYDRAULIC PUMP ASS'Y.

Basic numbers only shown on illustration. Order by Part Numbers shown in list of parts.

Ford

TRACTOR PARTS CATALOGUE

PART NUMBER	PART NAME	NO. REQ'D	MODEL	YEAR 19__
9N 600	Pump assy (hydraulic)-with vertical valve ports	1	9N, 9NAN, 2N, 2NAN	39-47
8N 600	Pump assy (hydraulic)-with horizontal valve ports	1	8N	48
	355693-S7 Bolt (pump to center housing)-7/16"-14 x 1-3/8"	9	9N, 9NAN, 2N, 2NAN, 8N	39-48
9N 604	Base assy (hydraulic pump)	1	9N, 9NAN, 2N, 2NAN	39-47
8N 604	Base assy (hydraulic pump)	1	8N	48
	357233-S Pin (hydraulic pump base)-dowel	1	8N	48
	72009-S Cotter pin (used in each end of 357233-S)	2	8N	48
	355650-S Plug (hydraulic pump)	1	8N	48
9N 609	Clamp (hydraulic pump valve chamber)-top	2	9N, 9NAN, 2N, 2NAN, 8N	39-48
	21442-S Bolt (clamp to valve chamber)-hex head-7/16"-14 x 1-3/8"	2	9N, 9NAN, 2N, 2NAN, 8N	39-48
9N 611	Gasket (pump base to center housing)-asbestos	1	9N, 9NAN, 2N, 2NAN, 8N	39-48
9N 613	Gasket (valve chamber to base)-asbestos	2	9N, 9NAN, 2N, 2NAN, 8N	39-48
9N 614	Gasket (center housing drain plug)-steel	1	9N, 9NAN, 2N, 2NAN, 8N	39-48
	355650-S Plug (drain)	1	9N, 9NAN, 2N, 2NAN, 8N	39-48
9N 615	Piston (hydraulic pump)	2	9N, 9NAN, 2N, 2NAN, 8N	39-48
9N 617	Cam (hydraulic pump block)	2	9N, 9NAN, 2N, 2NAN, 8N	39-48
9N 618	Cam (hydraulic pump)	1	9N, 9NAN, 2N, 2NAN, 8N	39-48
9N 621	Chamber assy (hydraulic pump valve)-RH	1	9N, 9NAN, 2N, 2NAN, 8N	39-48
9N 622	Chamber assy (hydraulic pump valve)-LH	1	9N, 9NAN, 2N, 2NAN, 8N	39-48
	21442-S Bolt (clamp to valve chamber)	2	8N	48
	353055-S Plug (hydraulic pump valve chamber)-pipe-1/4"-18	4	9N, 9NAN, 2N, 2NAN, 8N	39-48
	20881-S2 Bolt (valve chamber to body)-hex head-7/16"-20 x 1-9/16"-use with aluminum base	8	9N, 9NAN, 2N, 2NAN, 8N	39-48
	20878-S8 Bolt (valve chamber to body)-hex head-7/16"-20 x 1.25"-use with cast iron base	8	9N, 9NAN, 2N, 2NAN, 8N	39-48
2N 624	Support (hydraulic lift draft control spring seat)	1	9N, 9NAN, 2N, 2NAN, 8N	39-48
	21441-S7 Bolt (plate to cover)-hex head-7/16"-14 x 1-1/4"	3	9N, 9NAN, 2N, 2NAN, 8N	39-48
9N 625	Bushing (hydraulic pump exhaust valve)-1.0215" O.D.-.68" I.D. x 2.31"	1	9N, 9NAN, 2N, 2NAN	39-47
8N 625	Bushing (hydraulic pump exhaust valve)-1" O.D.-.68" I.D. x 2.56"	1	8N, 8NAN	48
9N 626	Guide (valve chamber assy valve)	4	9N, 9NAN, 2N, 2NAN, 8N	39-48
9N 627	Socket (hydraulic pump valve guide)	4	9N, 9NAN, 2N, 2NAN, 8N	39-48
9N 628	Valve (hydraulic pump outlet)	4	9N, 9NAN, 2N, 2NAN	39-47
9N 629	Valve (hydraulic pump inlet)	4	9N, 9NAN, 2N, 2NAN, 8N	39-48
8N 630	Valve (hydraulic pump exhaust)	1	8N	48
9N 632	Spring (hydraulic pump exhaust valve)	1	9N, 9NAN, 2N, 2NAN, 8N	39-48
9N 636	Plug (hydraulic pump valve chamber)	4	9N, 9NAN, 2N, 2NAN, 8N	39-48
9N 638	Valve assy (hydraulic pump safety)	1	9N, 9NAN, 2N, 2NAN, 8N	39-48
	72017-S Cotter pin-1/8" x 3/4"	1	9N, 9NAN, 2N, 2NAN, 8N	39-48

PART NUMBER	PART NAME	NO. REQ'D	MODEL	YEAR 19__
9N 640	Valve assy (hydraulic pump exhaust)-has "T" shaped construction for use with 9N-504 hydraulic lift fork assy	1	9N, 9NAN, 2N, 2NAN	39-47
	72003-S Cotter pin (exhaust valve stem to control lever)	1	8N	48
8N 640	Valve assy (hydraulic pump exhaust)-straight construction for use with 8N-643 valve control lever	1	8N	48
	352269-S7 Pin (exhaust valve stem to control lever)-clevis	1	8N	48
8N 641	Pin (hydraulic pump exhaust valve)-retaining	1	8N	48
8N 642	Stem (hydraulic pump exhaust valve)	1	8N	48
8N 643	Lever (intake and exhaust valve control)	1	8N, 8NAN	48
9N 644	Spring (hydraulic pump valve retainer)	1	9N, 9NAN, 2N, 2NAN, 8N	39-48
9N 645	Spring (hydraulic check valve)-1.06" free length x .32" I.D.	1	9N, 9NAN, 2N, 2NAN, 8N	39-48
9N 646	Spring (hydraulic outlet valve)-1.75" free length x .44" I.D.	4	9N, 9NAN, 2N, 2NAN, 8N	39-48
9N 647	Spring (hydraulic inlet valve)-.70" free length x .38" I.D.	4	9N, 9NAN, 2N, 2NAN, 8N	39-48
9N 649	Bushing (power take-off shaft)-in valve chamber	1	9N, 9NAN, 2N, 2NAN, 8N	39-48
2N 666-B	Link assy (upper halves)	2	9N, 9NAN, 2N, 2NAN, 8N	39-48
8N 680	Arm assy (drawbar control)	1	8N	48
8N 683	Rod (drawbar control)	1	8N	48
8N 684	Spring (drawbar control)	1	8N	48
8N 685	Cam (drawbar control)	1	8N	48
	73924-S Pin (drawbar control cam to link)-1/4" x 1 3/16"	1	8N	48
	73939-S Pin (drawbar control cam to link)-1/4" x 1 5/16"	1	8N	48
8N 686	Handle (drawbar control)	1	8N	48
	60160-S Rivet (drawbar control handle to shaft)	1	8N	48
	352660-S Pin (drawbar arm to hydraulic lift cover)	1	8N	48
8N 687	Retainer (drawbar control arm spring and ball)	1	8N	48
8N 689	Plate (drawbar control cam)	1	8N	48
8N 690	Link (drawbar control)	1	8N	48
8N 691	Bushing (draft control)-1.60" x .630" O.D. x .439" I.D.	1	8N	48
8N 692	Swivel (draft control)	1	8N	48
8N 693	Arm (drawbar control)	1	8N	48
	73298-S18 Pin (drawbar control arm)-dowel	1	8N	48
8N 694	Valve assy (hydraulic pump intake)	1	8N	48
8N 695	Bushing (hydraulic pump intake valve)-3.44" x 1.0015" O.D.-undercut and 7/16" drilled	1	8N	48
	34745-S Washer (hydraulic valve intake bushing spring retainer)	1	8N	48
	72052-S Cotter pin (hydraulic valve intake bushing spring retainer)	1	8N	48
8N 697	Spring (intake valve hydraulic valve)	1	8N	48
8N 698	Valve (intake control hydraulic pump)	1	8N	48
	34079-S Nut (intake valve adjusting)	1	8N	48
	350024-S Bolt (intake valve adjusting)	1	8N	48

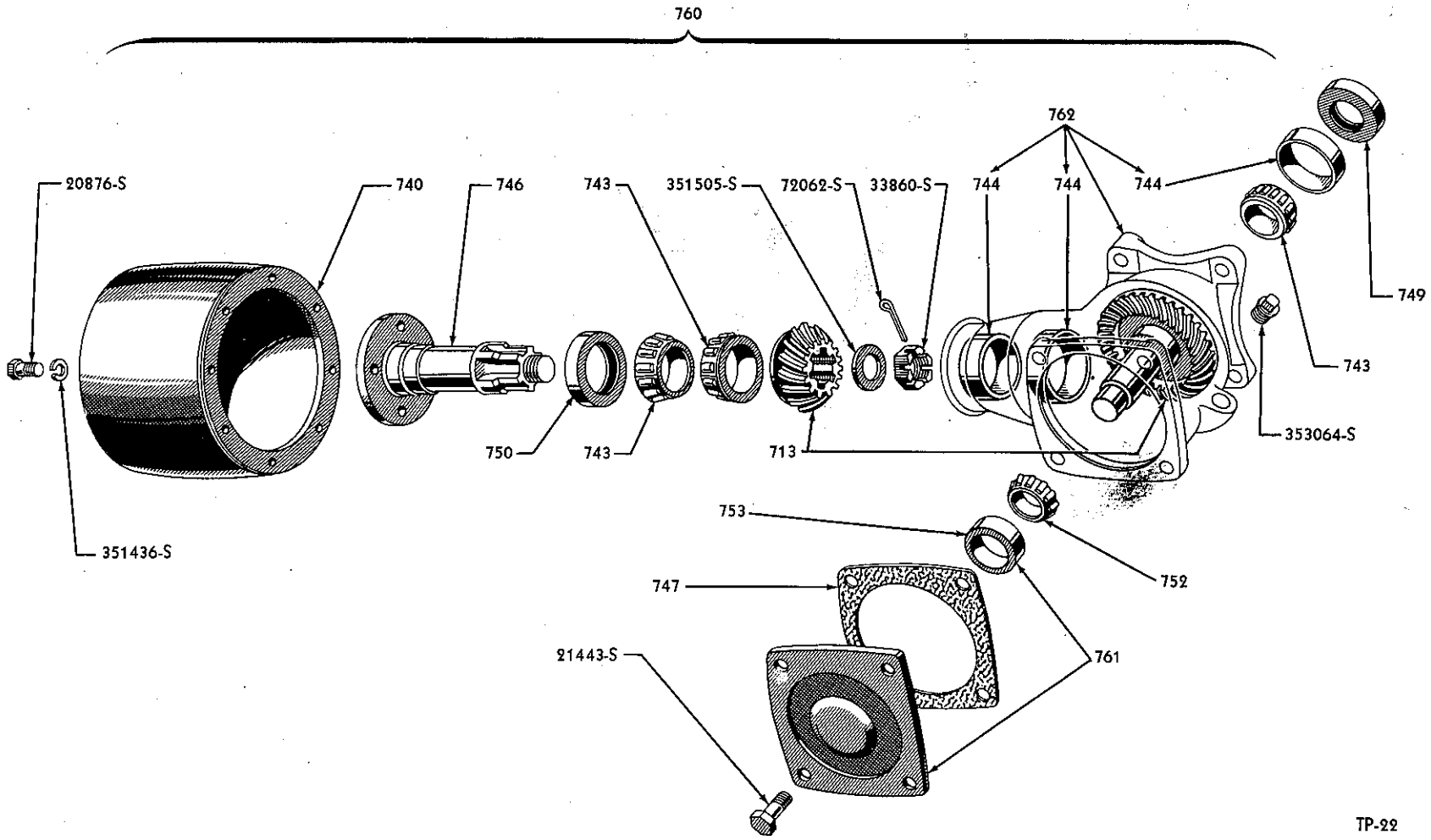

1939-48 POWER TAKE-OFF GEAR, HOUSING AND PULLEY ASS'Y.

Basic numbers only shown on illustration. Order by Part Numbers shown in list of parts.

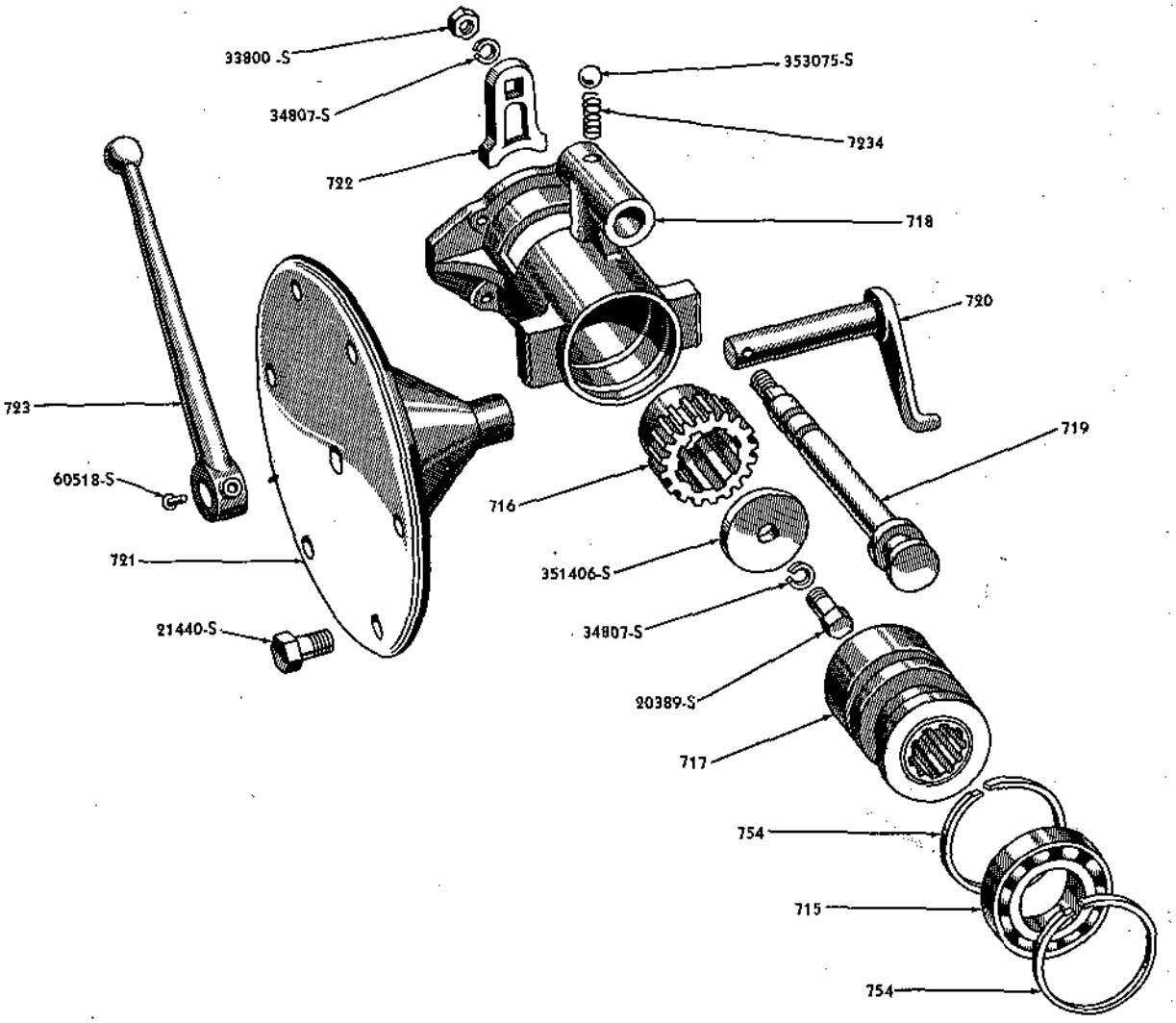

TP-5

1948 HYDRAULIC POWER TAKE-OFF SHIFTER LEVER, FORK AND RELATED PARTS

Basic numbers only shown on illustration. Order by Part Numbers shown in list of parts.

PART NUMBER	PART NAME	NO. REQ'D	MODEL	YEAR 19__
	Power Take-off			
9N 700-C	Power take-off assy	1	9N, 9NAN, 2N, 2NAN, 8N	39-48
9N 703	Oil seal (power take-off)	1	9N, 9NAN, 2N, 2NAN, 8N	43-48
9N 710-A	Shaft and sleeve assy (power take-off)-26.84" long-10 splines long end-6 splines short end-27/64" drilled short end	1	9N, 9NAN	39-43
9N 710-B	Shaft and sleeve assy (power take-off)	1	2N, 2NAN, 8N	43-48
9N 712	Bearing assy (power take-off)	1	9N, 9NAN	39-43
9N 713	Gear set (power take-off drive and driven)-matched	1	9N, 9NAN, 2N, 2NAN	39-47
9N 714	Washer (bearing retainer)-2" O.D. x 1.62" I.D. x .62" thick	1	9N, 9NAN	39-43
9N 715	Bearing assy (power take-off shifter lever and fork)	1	9N, 9NAN, 2N, 2NAN, 8N	39-48
9N 715	Bearing assy (power take-off shaft)	1	9N, 9NAN, 2N, 2NAN, 8N	39-48

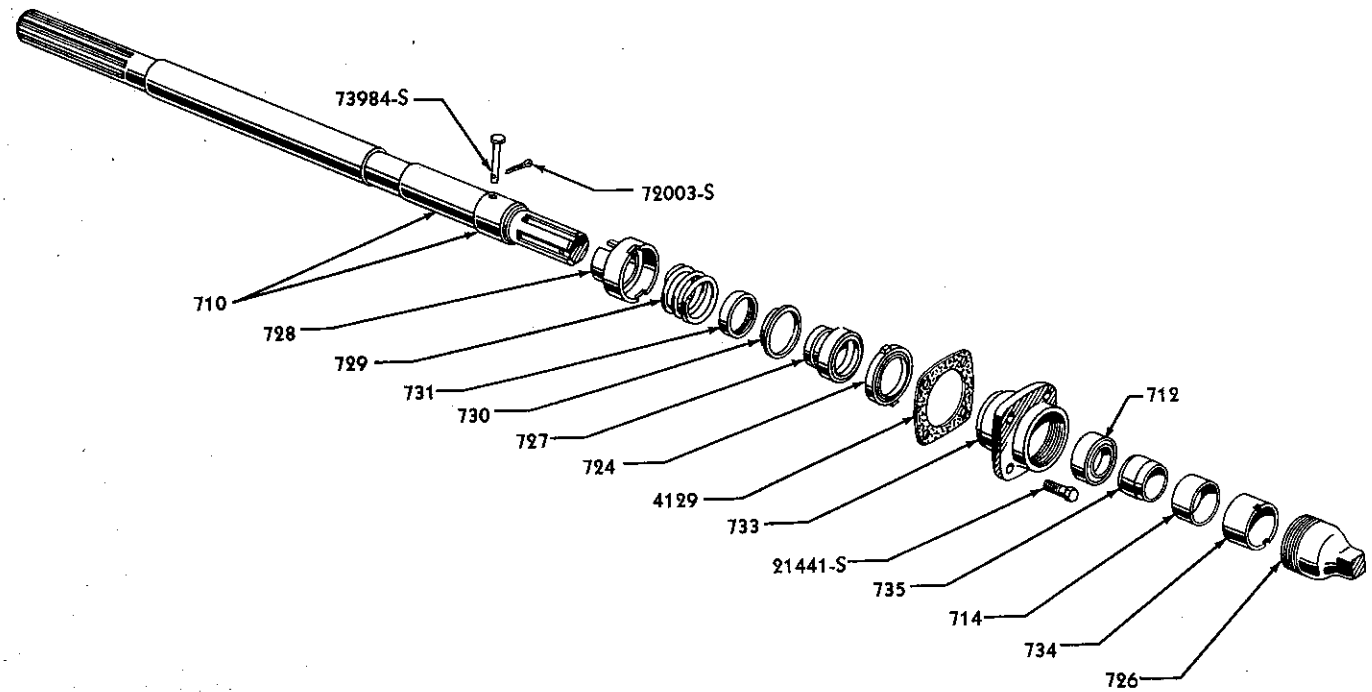

TP-21

1939-43 POWER TAKE-OFF ASS'Y.

Basic numbers only shown on illustration. Order by Part Numbers shown in list of parts.

PART NUMBER	PART NAME	NO. REQ'D	MODEL	YEAR 19___
9N 716	Hub (power take-off clutch)	1	9N, 9NAN, 2N, 2NAN, 8N	39-48
	20389-S Bolt (clutch hub to transmission)-hex head 3/8"-24 x 1"	1	9N, 9NAN, 2N, 2NAN, 8N	39-48
	34807-S Lockwasher (clutch hub bolt)-3/8"	1	9N, 9NAN, 2N, 2NAN, 8N	39-48
	351402-S Washer-13/32" I.D.-1 1/2" O.D.	1	9N, 9NAN, 2N, 2NAN, 8N	39-48
2N 717	Sleeve (power take-off clutch)	1	9N, 9NAN, 2N, 2NAN, 8N	39-48
9N 718	Support (power take-off shaft bearing)-unfinished flat	1	9N, 9NAN, 2N, 2NAN, 8N	39-47
8N 718	Support (power take-off shaft bearing)-finished flat	1	8N	48
	353075-S Ball (shifter rail mesh spring)-steel-3/8"	1	9N, 9NAN, 2N, 2NAN, 8N	39-48
	79-7234 Spring (power take-off shifter rail mesh)	1	9N, 9NAN, 2N, 2NAN, 8N	39-48
9N 719	Rail (power take-off shifter)	1	9N, 9NAN, 2N, 2NAN, 8N	39-48
	34807-S Lockwasher (shifter stop)-3/8"	1	9N, 9NAN, 2N, 2NAN, 8N	39-48
	33800-S Nut (shifter stop)-hex head-3/8"-24	1	9N, 9NAN, 2N, 2NAN, 8N	39-48
9N 720	Fork (power take-off shifter)	1	9N, 9NAN, 2N, 2NAN, 8N	39-48
9N 721	Plate assy (power take-off shifter)-casting with external lever stop	1	9N, 9NAN, 2N, 2NAN	39-47
8N 721	Plate assy (power take-off shifter)-stamping without external lever stop	1	8N	48
	21440-S7 Bolt (shifter plate to housing)-hex head-7/16"-14 x .72"	4	9N, 9NAN, 2N, 2NAN, 8N	39-48
9N 722	Stop (power take-off shifter rail)	1	9N, 9NAN, 2N, 2NAN, 8N	39-48

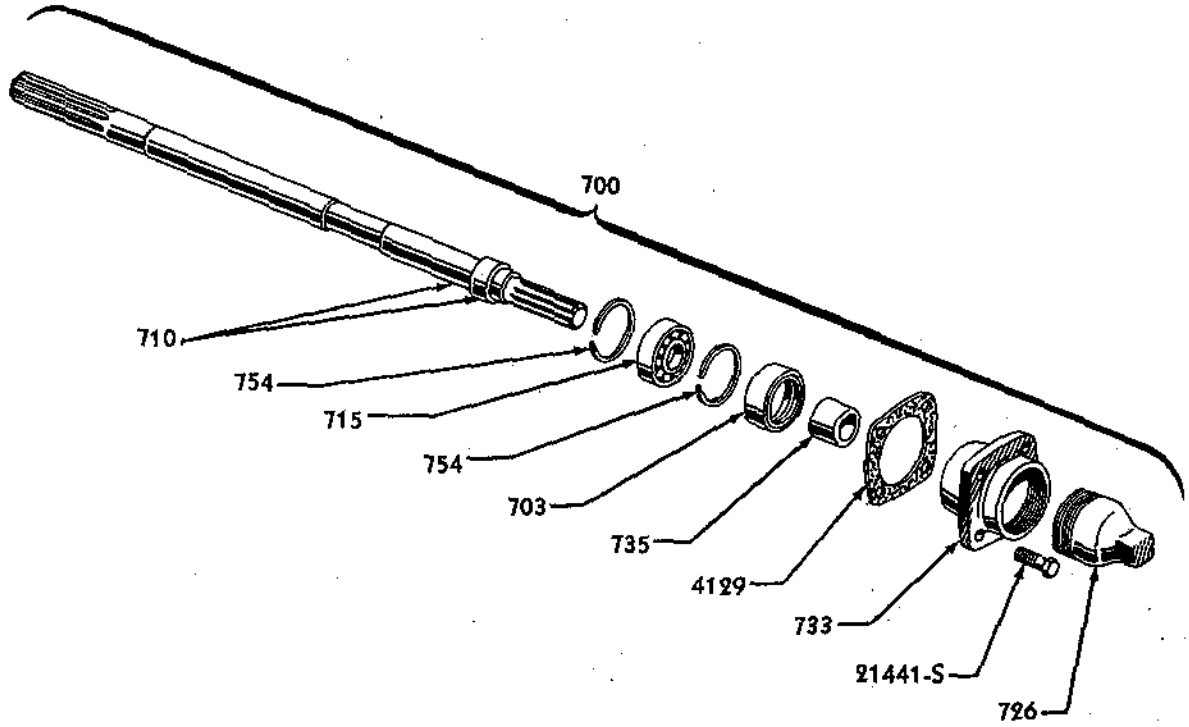

TP-21 A

1943-48 POWER TAKE-OFF ASS'Y.

Basic numbers only shown on illustration. *Order by Part Numbers shown in list of parts.*

PART NUMBER	PART NAME	NO. REQ'D	MODEL	YEAR 19__
9N 723	Lever (power take-off shifter)	1	9N, 9NAN, 2N, 2NAN, 8N	39-48
	60518-S Rivet (shifter lever to fork) - 1/4" x 1-1/4"	1	9N, 9NAN, 2N, 2NAN, 8N	39-48
9N 724	Washer (power take-off seal case) - 2.25" O.D. x 1.376" I.D. x 1.25" thick	1	9N, 9NAN	39-43
2N 726	Cap (power take-off cover)	1	9N, 9NAN, 2N, 2NAN, 8N	39-48
9N 727	Seal (power take-off bearing)	1	9N, 9NAN	39-43
9N 728-B	Case (power take-off sleeve bearing seal)	1	9N, 9NAN	39-43
9N 729	Spring (power take-off bearing seal)	1	9N, 9NAN	39-43
9N 730	Guide (power take-off spring)	1	9N, 9NAN	39-43
9N 731	Ring (power take-off bearing seal)	1	9N, 9NAN	39-43
9N 733-A	Cover (power take-off shaft) - internal thread - 2" deep	1	9N, 9NAN	39-43
9N 733-B	Cover (power take-off shaft) - internal thread - 3/4" deep	1	2N, 2NAN, 8N	43-48
	21441-S7 Bolt (cover to center housing) - hex head - 7/16" - 14 x 1.12"	4	9N, 9NAN, 2N, 2NAN, 8N	39-48
9N 734	Retainer (power take-off bearing)	1	9N, 9NAN	39-43
9N 735-A	Sleeve (power take-off) - 1.615" O.D. - 1.118" I.D. x 1" long	1	9N, 9NAN	39-43
9N 735-B	Sleeve (power take-off) - 1.62" O.D. - 1.118" I.D. x .88" long	1	2N, 2NAN, 8N	43-48
9N 740-A	Pulley (power take-off) - 9" diameter	1	9N, 9NAN, 2N, 2NAN, 8N	39-48
9N 740-B	Pulley (power take-off) - 8" diameter	1	9N, 9NAN, 2N, 2NAN, 8N	39-48
	20876-S7 Bolt (pulley to shaft) - 7/16" - 20 x .88"	4	9N, 9NAN, 2N, 2NAN, 8N	39-48
	351436-S7 Lockwasher - 7/16"	4	9N, 9NAN, 2N, 2NAN, 8N	39-48

Ford

TRACTOR PARTS CATALOGUE

PART NUMBER	PART NAME	NO. REQ'D	MODEL	YEAR 19__
9N 743	Cone and roller assy (power take-off pulley shaft to housing bearing)	1	9N, 9NAN, 2N, 2NAN, 8N	39-48
9N 743	Cone and roller assy (power take-off driven gear in housing bearing)	1	9N, 9NAN, 2N, 2NAN, 8N	39-48
9N 743	Cone and roller assy (power take-off drive gear bearing)	1	9N, 9NAN, 2N, 2NAN, 8N	39-48
9N 744	Cup (power take-off pulley shaft bearing)	1	9N, 9NAN, 2N, 2NAN, 8N	39-48
9N 744	Cup (power take-off driven gear bearing)	1	9N, 9NAN, 2N, 2NAN, 8N	39-48
9N 744	Cup (power take-off drive gear bearing)	1	9N, 9NAN, 2N, 2NAN, 8N	39-48
9N 746	Shaft (power take-off pulley)	1	9N, 9NAN, 2N, 2NAN, 8N	39-48
	351505-S7 Washer (gear to pulley shaft)-flat-5/8" (5/32" x 1-1/4")	1	9N, 9NAN, 2N, 2NAN, 8N	39-48
	33860-S Nut (driven gear to pulley shaft)-castle-5/8"-18	1	9N, 9NAN, 2N, 2NAN, 8N	39-48
	72062-S Cotter pin	1	9N, 9NAN, 2N, 2NAN, 8N	39-48
9N 747-A	Gasket (power take-off housing cover)-.020/.023"	as reqd	9N, 9NAN, 2N, 2NAN, 8N	39-48
9N 747-B	Gasket (power take-off housing cover)-.016/.019"	as reqd	9N, 9NAN, 2N, 2NAN, 8N	39-48
9N 747-C	Gasket (power take-off housing cover)-.012/.015"	as reqd	9N, 9NAN, 2N, 2NAN, 8N	39-48
9N 749	Oil seal (power take-off drive gear bearing)-2.252" O.D. x 1.375" I.D. x .485" thick	1	9N, 9NAN, 2N, 2NAN, 8N	39-48
9N 750	Oil seal (power take-off pulley shaft bearing)-2.752" O.D. x 1.687" I.D. x .485" thick	1	9N, 9NAN, 2N, 2NAN, 8N	39-48
9N 752	Cone and roller assy (power take-off pilot bearing)	1	9N, 9NAN, 2N, 2NAN, 8N	39-48
9N 753	Cup (power take-off pilot bearing)	1	9N, 9NAN, 2N, 2NAN, 8N	39-48
9N 754	Snap ring (power take-off shaft bearing)-2.58" O.D. x 2.42" I.D. x .0760" thick	2	9N, 9NAN, 2N, 2NAN, 8N	39-48
9N 754	Snap ring (power take-off shifter lever and fork bearing)-2.58" O.D. x 2.42" I.D. x .0760" thick	2	9N, 9NAN, 2N, 2NAN, 8N	39-48
9N 755	Guard (power take-off pulley)-use with 9N-760 assy	1	9N, 9NAN, 2N, 2NAN, 8N	39-48
9N 760	Gear, housing and pulley assy (power take-off)	1	9N, 9NAN, 2N, 2NAN, 8N	39-48
9N 761	Cover and bearing cup assy (power take-off)	1	9N, 9NAN, 2N, 2NAN, 8N	39-48
	21443-S7 Bolt (cover to housing)-hex head-7/16"-14 x .94"	4	9N, 9NAN, 2N, 2NAN, 8N	39-48
9N 762	Housing and bearing cup assy (power take-off)	1	9N, 9NAN, 2N, 2NAN, 8N	39-48
	353064-S7 Plug (housing drain)	1	9N, 9NAN, 2N, 2NAN, 8N	39-48

Ford

TRACTOR PARTS CATALOGUE

PART NUMBER	PART NAME	NO. REQ'D	MODEL	YEAR 19

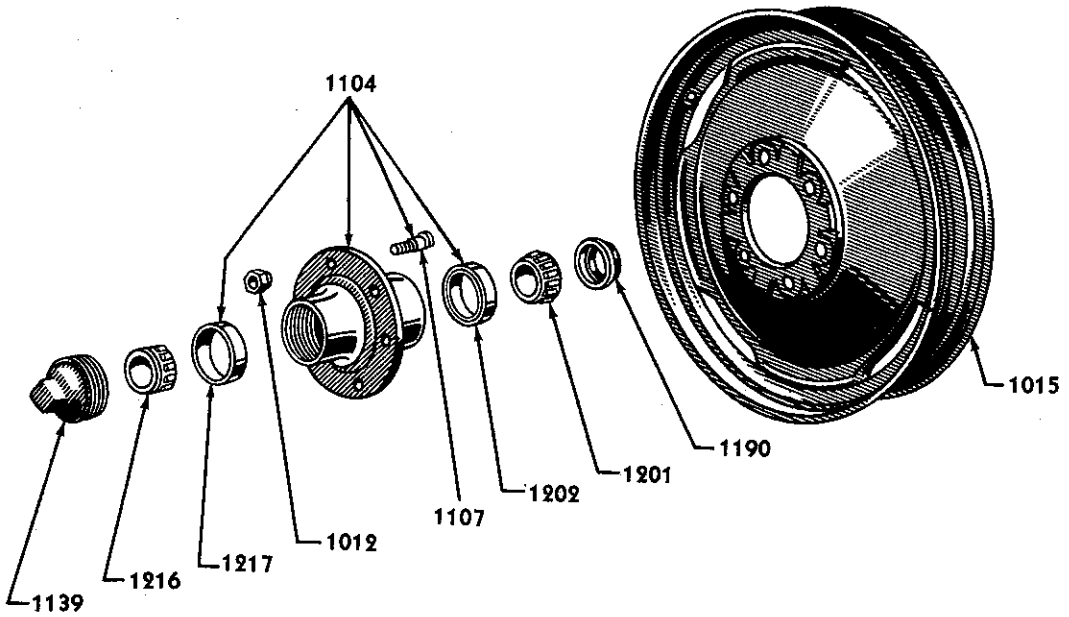

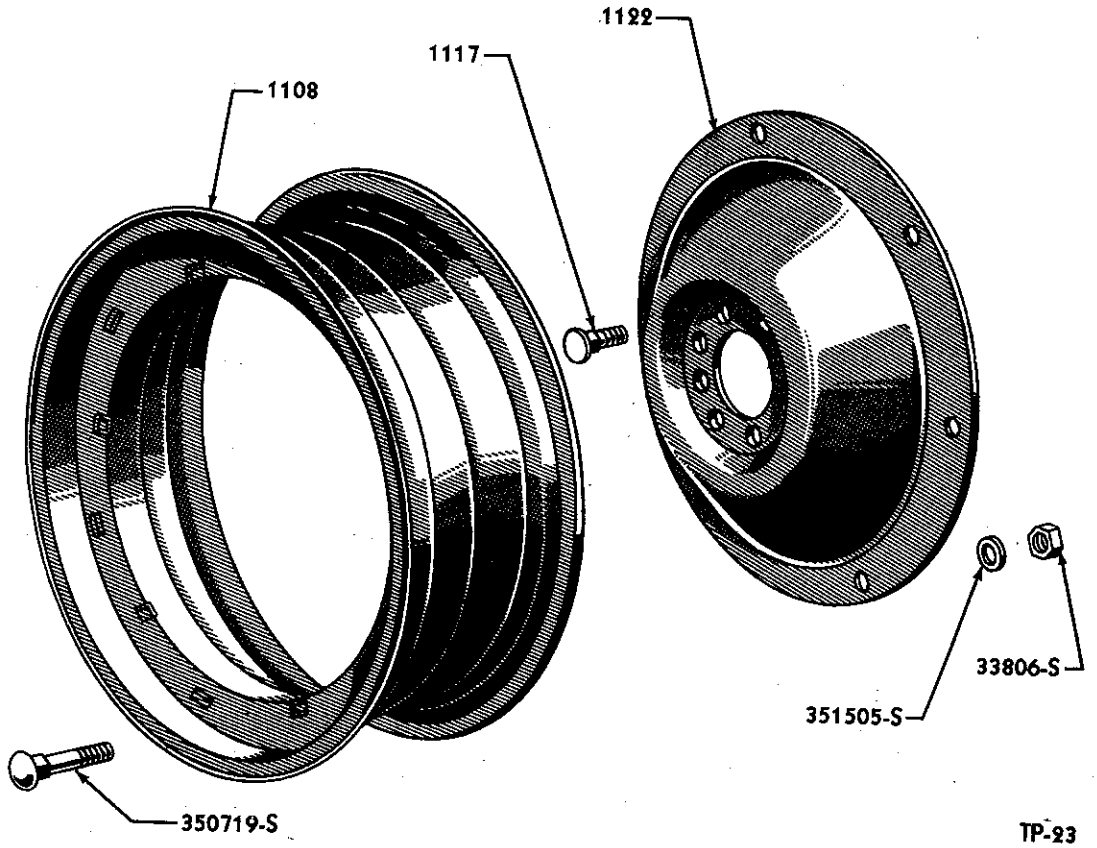

1948 FRONT AND REAR WHEEL (RUBBER) AND RELATED PARTS

Basic numbers only shown on illustration. Order by Part Numbers shown in list of parts.

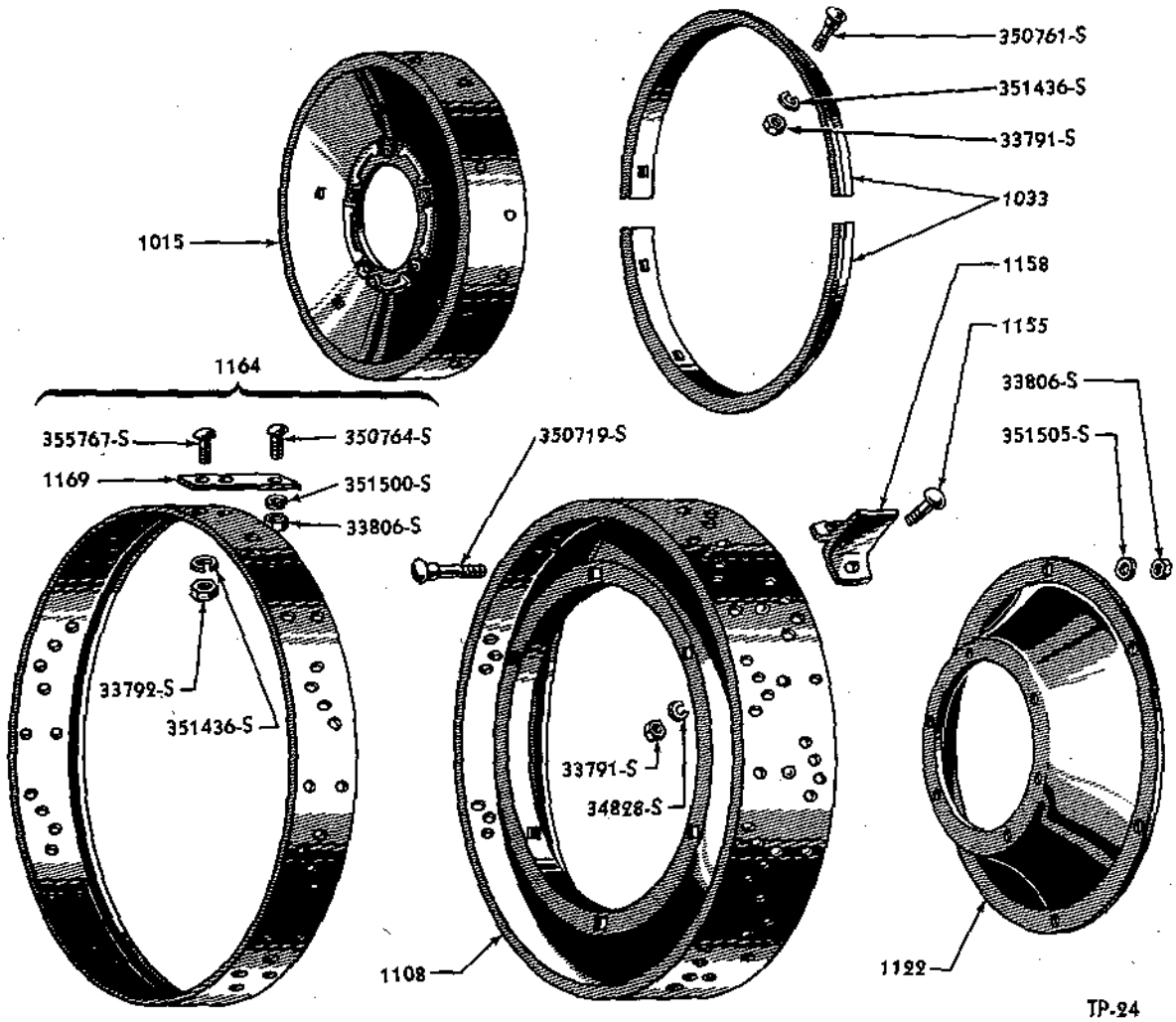

1939-48 FRONT AND REAR WHEEL (STEEL) AND RELATED PARTS

Basic numbers only shown on illustration. Order by Part Numbers shown in list of parts.

PART NUMBER	PART NAME	NO. REQ'D	MODEL	YEAR 19__
	Wheels, Hubs and Rims			
9N 1012	Nut (wheel hub bolt)-use with cast hub	10	9N, 9NAN, 2N, 2NAN, 8N	39-48
2N 1012	Nut (wheel hub bolt)-use with pressed hub	10	2N, 2NAN, 8N	45-48
9N 1015-A	Wheel assy-front-11.25" bolt hole radius	2	9N, 9NAN, 2N, 2NAN	39-47
9N 1015-C	Wheel assy-25"-use skid band 9N-1033-C	2	9N, 9NAN, 2N, 2NAN	39-47
8N 1015	Wheel assy-front-6" bolt hole radius	2	8N	48
9N 1033-A	Skid band-use with 24" wheel	2	9N, 9NAN, 2N, 2NAN	39-47
9N 1033-C	Skid band-use with 25" wheel	2	9N, 9NAN, 2N, 2NAN	39-47
	350761-S Bolt (skid band to rim)-oval head-7/16"-20 x .94"	16	9N, 9NAN, 2N, 2NAN	39-47
	351436-S7 Lockwasher (skid band to rim)	16	9N, 9NAN, 2N, 2NAN	39-47
	33791-S18 Nut (skid band to rim)-hex-7/16"-20	16	9N, 9NAN, 2N, 2NAN	39-47
9N 1104-A	Hub and bolt assy (front wheel)-11.25" bolt hole radius	2	9N, 9NAN, 2N, 2NAN	39-47
8N 1104	Hub and bolt assy (front wheel)-6" bolt hole radius	2	8N	48-

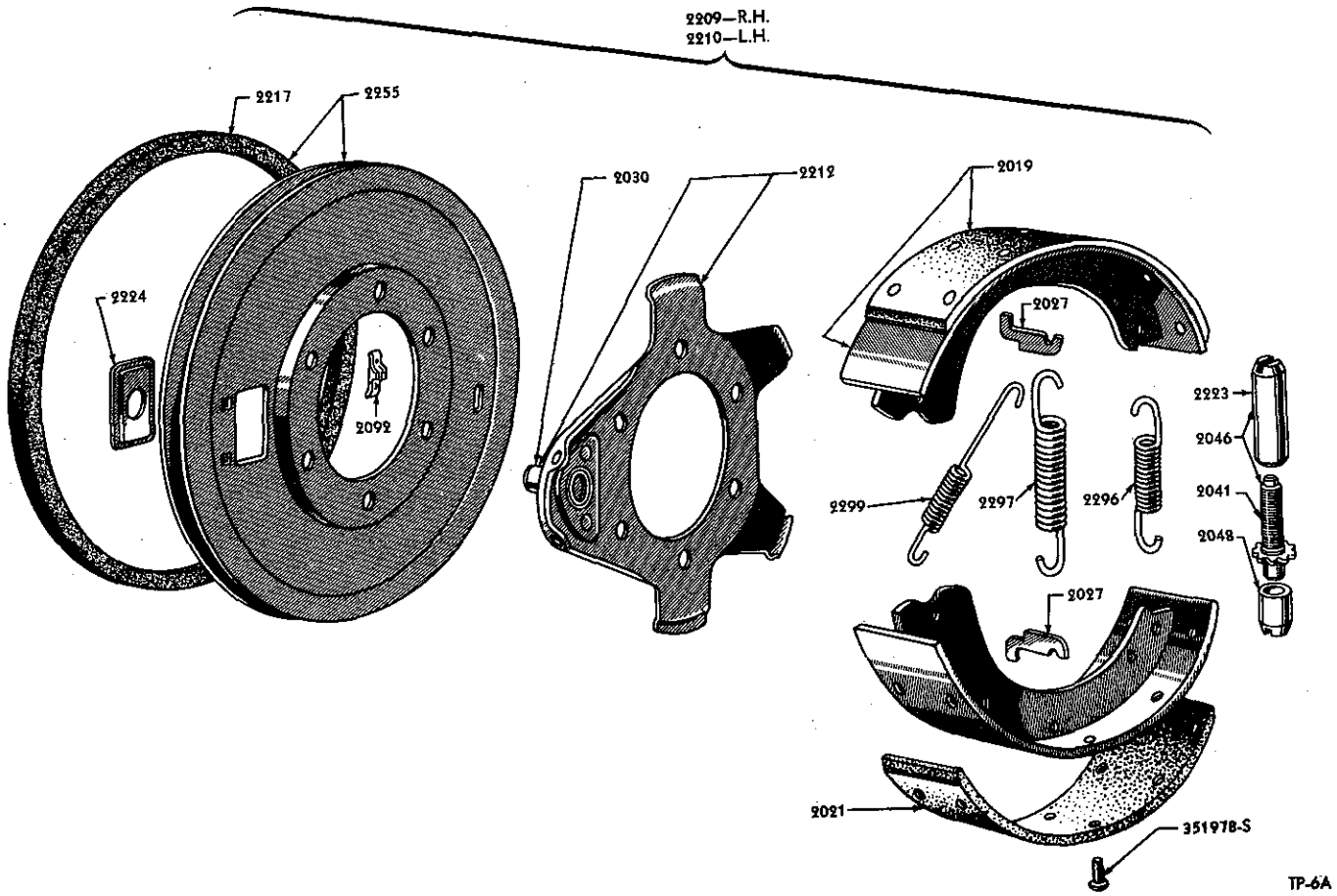

1948 BRAKES

Basic numbers only shown on illustration. Order by Part Numbers shown in list of parts.

PART NUMBER	PART NAME	NO. REQ'D	MODEL	YEAR 19____
9N 2040	Bracket (shoe adjusting)	2	9N, 9NAN, 2N, 2NAN	39-47
	60442-S Rivet (bracket to plate)-round head-1/4" x 7/8"	4	9N, 9NAN, 2N, 2NAN	39-47
9N 2041	Wedge (brake adjusting)	2	9N, 9NAN, 2N, 2NAN	39-47
8N 2041	Screw (brake adjusting)	2	8N	48
81T 2042	Link (brake shoe)	4	9N, 9NAN, 2N, 2NAN	39-47
9N 2043	Cap (brake adjusting bracket)	2	9N, 9NAN, 2N, 2NAN	39-47
8N 2048	Socket (brake adjusting screw)	2	8N	48
9N 2050	Wedge (brake operating shaft)	2	9N, 9NAN, 2N, 2NAN	39-47
78 2067-C	Cap (brake shoe hold-down spring)	8	9N, 9NAN, 2N, 2NAN	39-47
9N 2068	Spring (brake shoe hold-down)	8	9N, 9NAN, 2N, 2NAN	39-47
9N 2069	Pin (brake shoe hold-down)	8	9N, 9NAN, 2N, 2NAN	39-47
78 2071	Cup (brake shoe hold-down spring)-centralizer	8	9N, 9NAN, 2N, 2NAN	39-47
8N 2092	Cover (brake adjusting hole)	2	8N	48

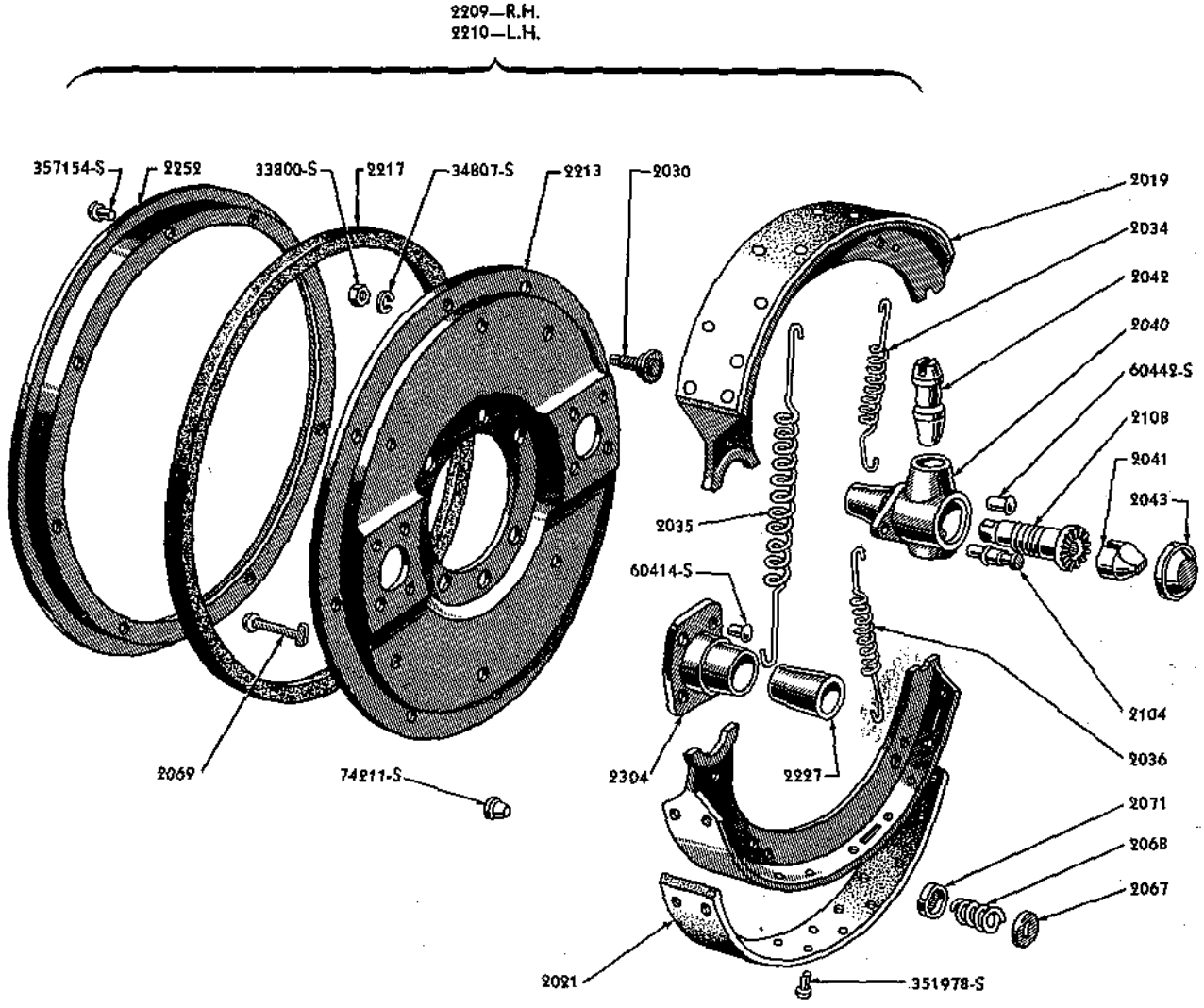

TP-37

1939-47 BRAKES

Basic numbers only shown on illustration. *Order by Part Numbers shown in list of parts.*

PART NUMBER	PART NAME	NO. REQ'D	MODEL	YEAR 19—
	Brakes			
8N 2007	Kit (brake lining and rivets)-11" brake-Consists of the following 4-92Y 2021-A Lining 60- 351978-S Rivet	1	8N	48
9N 2019	Shoe & lining assy (14" brake)	4	9N, 9NAN, 2N, 2NAN	39-47
8N 2019	Shoe & lining assy (11" brake)	4	8N	48
92Y 2021-A	Lining (brake shoe)-11"	4	9N, 9NAN, 2N, 2NAN	39-47
	351978-S Rivet (lining to shoe)-flat head tubular-3/16"-.47"	60	9N, 9NAN, 2N, 2NAN, 8N	39-48
8N 2027	Anchor (brake spring)	4	8N	48
9N 2030	Equalizer assy (brake)	2	9N, 9NAN, 2N, 2NAN	39-47
	34807-S7 Lockwasher-3/8"	2	9N, 9NAN, 2N, 2NAN	39-47
	33800-S7 Nut-3/8"-24	2	9N, 9NAN, 2N, 2NAN	39-47
9N 2034	Spring (brake shoe return)-upper-Green	2	9N, 9NAN, 2N, 2NAN	39-47
9N 2035	Spring (brake shoe return)-long-Blue	2	9N, 9NAN, 2N, 2NAN	39-47
9N 2036	Spring (brake shoe return)-lower-Red	2	9N, 9NAN, 2N, 2NAN	39-47

Ford

TRACTOR PARTS CATALOGUE

PART NUMBER	PART NAME	NO. REQ'D	MODEL	YEAR 19__
78 1107	Bolt (wheel hub)-use only with cast hub-1/2"-20 x 1.26"-with shoulder .52" long x .56" diameter-flat sided head	10	9N, 9NAN, 2N, 2NAN	39-47
9N 1107-B	Bolt (wheel hub)-use only with pressed steel hub-1/2"-20 x 1.04" fluted shoulder	10	2N, 2NAN	45-47
9N 1108-C	Rim assy (rear wheel)-32" x 8"	2	9N, 9NAN, 2N, 2NAN	39-47
9N 1108-D	Rim assy (rear wheel)-28" x 10"	2	9N, 9NAN, 2N, 2NAN, 8N	39-48
9N 1108-F	Rim assy (rear wheel)-less lugs-used with 9N-1122-D	2	9N, 9NAN, 2N, 2NAN	39-47
9N 1108-G	Rim assy (rear wheel)-less lugs-used with 9N-1122-E	2	9N, 9NAN, 2N, 2NAN	39-47
	350719-S7 Bolt (rim to disc)-round head square shoulder-5/8"-18	12	9N, 9NAN, 2N, 2NAN	39-47
	33806-S7 Nut (wheel to disc)-5/8"-18	12	9N, 9NAN, 2N, 2NAN	39-47
	351505-S7 Washer (wheel to disc)-5/8"	12	9N, 9NAN, 2N, 2NAN	39-47
	33806-S34 Nut (rear wheel to hub)-hex-5/8"-18	12	9N, 9NAN, 2N, 2NAN, 8N	39-48
	351505-S7 Washer (rear wheel to hub)-5/8" (5/32" x 1 1/4")-flat	12	9N, 9NAN, 2N, 2NAN, 8N	39-48
9N 1117	Bolt (wheel to flange)-5/8"-18 x 1.85" plain shoulder-flat sided head	12	9N, 9NAN, 2N, 2NAN	39-47
8N 1117	Bolt (wheel disc to brake drum)-rear-5/8"-18 x 1.98" full length with fluted shoulder	16	8N	48
9N 1122-D	Disc (rear wheel)-32" x 8"-used with 9N-1108-F	2	9N, 9NAN, 2N, 2NAN	39-47
9N 1122-E	Disc (rear wheel)-28" x 10"-used with 9N-1108-G	2	9N, 9NAN, 2N, 2NAN, 8N	39-48
8N 1122	Disc (rear wheel)	2	8N	48
9N 1126	Drum (rear wheel brake)-14"	2	9N, 9NAN, 2N, 2NAN	39-47
	351505-S7 Washer (wheel disc to axle flange)-5/8"	12	9N, 9NAN, 2N, 2NAN	39-47
	33806-S34 Nut (wheel disc to axle flange)-5/8"-18	12	9N, 9NAN, 2N, 2NAN	39-47
8N 1126	Drum (rear wheel brake)-11"	2	8N	48
8N 1134	Nut (rear wheel bolt)	16	8N	48
2N 1139-B	Cap (front hub)	2	9N, 9NAN, 2N, 2NAN, 8N	39-48
9N 1155	Bolt (lug to wheel)-7/16"-20 x 1.09"-button head-flat sided-undercut shoulder	96	9N, 9NAN, 2N, 2NAN	39-47
	34828-S Lockwasher (lug to wheel)	96	9N, 9NAN, 2N, 2NAN	39-47
	33791-S18 Nut (lug to wheel)-7/16"-20	96	9N, 9NAN, 2N, 2NAN	39-47
9N 1158-A	Lug (wheel)-4"	48	9N, 9NAN, 2N, 2NAN	39-47
9N 1158-B	Lug (wheel)-3"	48	9N, 9NAN, 2N, 2NAN	39-47
2N 1164	Extension assy (steel wheel)-with straps-special equipment	2	9N, 9NAN, 2N, 2NAN	39-47
2N 1169	Strap (extension to wheels)	12	9N, 9NAN, 2N, 2NAN	39-47
	355767-S Bolt (strap to extension)-carriage-7/16"-20 x 1-1/8"	24	9N, 9NAN, 2N, 2NAN	39-47
	351436-S Lockwasher (strap to extension)-7/16"	24	9N, 9NAN, 2N, 2NAN	39-47
	33792-S18 Nut (strap to extension)-hex-7/16"-20	24	9N, 9NAN, 2N, 2NAN	39-47
	350764-S Bolt (strap to wheels)-special carriage-5/8"-18 x 1.38"	12	9N, 9NAN, 2N, 2NAN	39-47
	351500-S7 Lockwasher (strap to wheels)-5/8"	12	9N, 9NAN, 2N, 2NAN	39-47
	33806-S18 Nut (strap to wheels)-5/8"-18	12	9N, 9NAN, 2N, 2NAN	39-47
8N 1171	Hub and stud assy (rear wheel)	2	8N	48
9N 1190-B	Seal assy (front hub dust)	2	9N, 9NAN, 2N, 2NAN, 8N	39-48
9N 1191	Spacer (front hub dust cap)	2	9N, 9NAN, 2N, 2NAN	39-47
9N 1195	Washer (front hub bearing retainer)	2	9N, 9NAN, 2N, 2NAN, 8N	39-48
B 1201	Cone and roller assy (front hub)-inner	2	9N, 9NAN, 2N, 2NAN, 8N	39-48
B 1202	Cup (front wheel inner bearing)	2	9N, 9NAN, 2N, 2NAN, 8N	39-48
B 1216	Cone and roller assy (front hub)-outer	2	9N, 9NAN, 2N, 2NAN, 8N	39-48
B 1217	Cup (front wheel outer bearing)	2	9N, 9NAN, 2N, 2NAN, 8N	39-48

Ford

TRACTOR PARTS CATALOGUE

PART NUMBER	PART NAME	NO. REQ'D	MODEL	YEAR 19__
81T 2104	Stud (brake shoe retracting spring)	2	9N, 9NAN, 2N, 2NAN	39-47
81T 2108	Stem assy (brake adjusting)	2	9N, 9NAN, 2N, 2NAN	39-47
91A 2133	Nut (fuel line tube)		Refer to Fuel Tank, Fuel Lines & Sediment Bulb Group	
9N 2209-B	Brake assy-RH	1	9N, 9NAN, 2N, 2NAN	39-47
8N 2209	Brake assy-RH	1	8N	48
9N 2210-B	Brake assy-LH	1	9N, 9NAN, 2N, 2NAN	39-47
8N 2210	Brake assy-LH	1	8N	48
8N 2212	Plate assy (brake support)	2	8N	48
9N 2213-B	Plate assy (brake carrier)	2	9N, 9NAN, 2N, 2NAN	39-47
9N 2217	Ring (brake dust seal)-felt-14.46" I.D.-.370" sq.	2	9N, 9NAN, 2N, 2NAN	39-47
8N 2217	Ring (brake dust seal)-felt-11.525" I.D.-.370" sq.	2	8N	48
8N 2223	Nut (brake adjusting screw)	2	8N	48
8N 2224	Cover (brake camshaft hole)	2	8N	48
9N 2227-A	Bushing (brake camshaft)	2	9N, 9NAN, 2N, 2NAN	39-47
8N 2246	Camshaft (brake actuating)-RH	1	8N	48
9N 2247	Camshaft (brake actuating)	2	9N, 9NAN, 2N, 2NAN	39-47
8N 2247	Camshaft (brake actuating)-LH	1	8N	48
9N 2248	Collar (brake actuating camshaft)	2	9N, 9NAN, 2N, 2NAN	39-47
	352472-S7 Pin (shaft to collar)	2	9N, 9NAN, 2N, 2NAN	39-47
9N 2252	Ring (brake dust seal)	2	9N, 9NAN, 2N, 2NAN	39-47
	357154-S7 Rivet (brake plate to seal ring)-9/64"	16	9N, 9NAN, 2N, 2NAN	39-47
	M-5334 Cement (felt to steel)	as reqd	9N, 9NAN, 2N, 2NAN	39-47
8N 2255	Seal assy (brake dust)	2	8N	48
91A 2269	Tubing (fuel)-.25" O.D.-.19" I.D.-supplied in 25 ft. rolls		Refer to Fuel Tank, Fuel Line & Sediment Bulb Group	
9N 2279	Clip (wiring)-for tractors having ignition switch on RH side of instrument panel		Refer to Wiring Group	
8N 2296	Spring (brake adjusting)-3.63" free length x .64" O.D.	2	8N	48
8N 2297	Spring (brake shoe retracting)-5.83" free length x .69" O.D.	2	8N	48
8N 2299	Spring (brake shoe secondary)-4.59" free length x .53" O.D.-used in LH brake assy only	1	8N	48

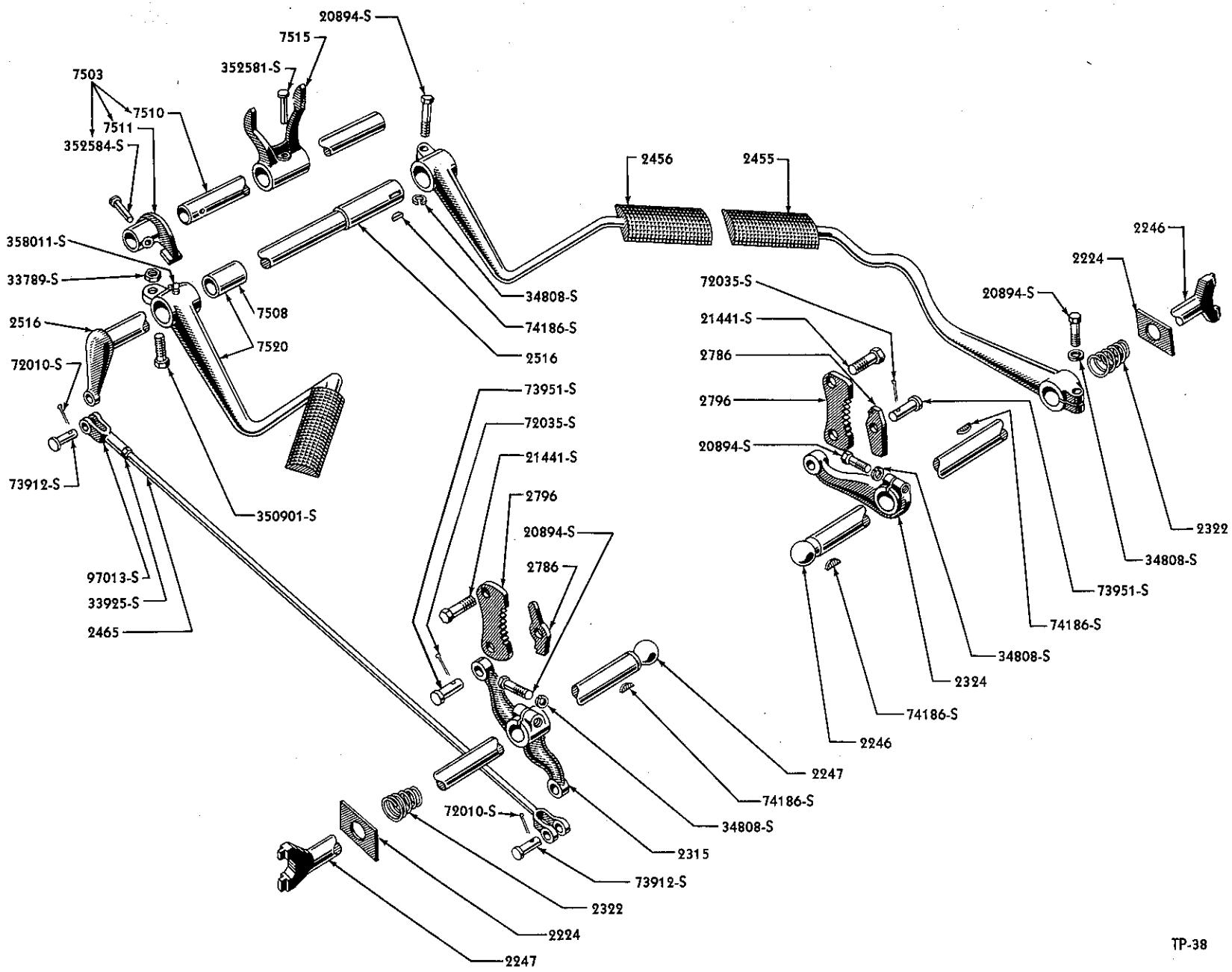

1948 CLUTCH AND BRAKE PEDALS

Basic numbers only shown on illustration. Order by Part Numbers shown in list of parts.

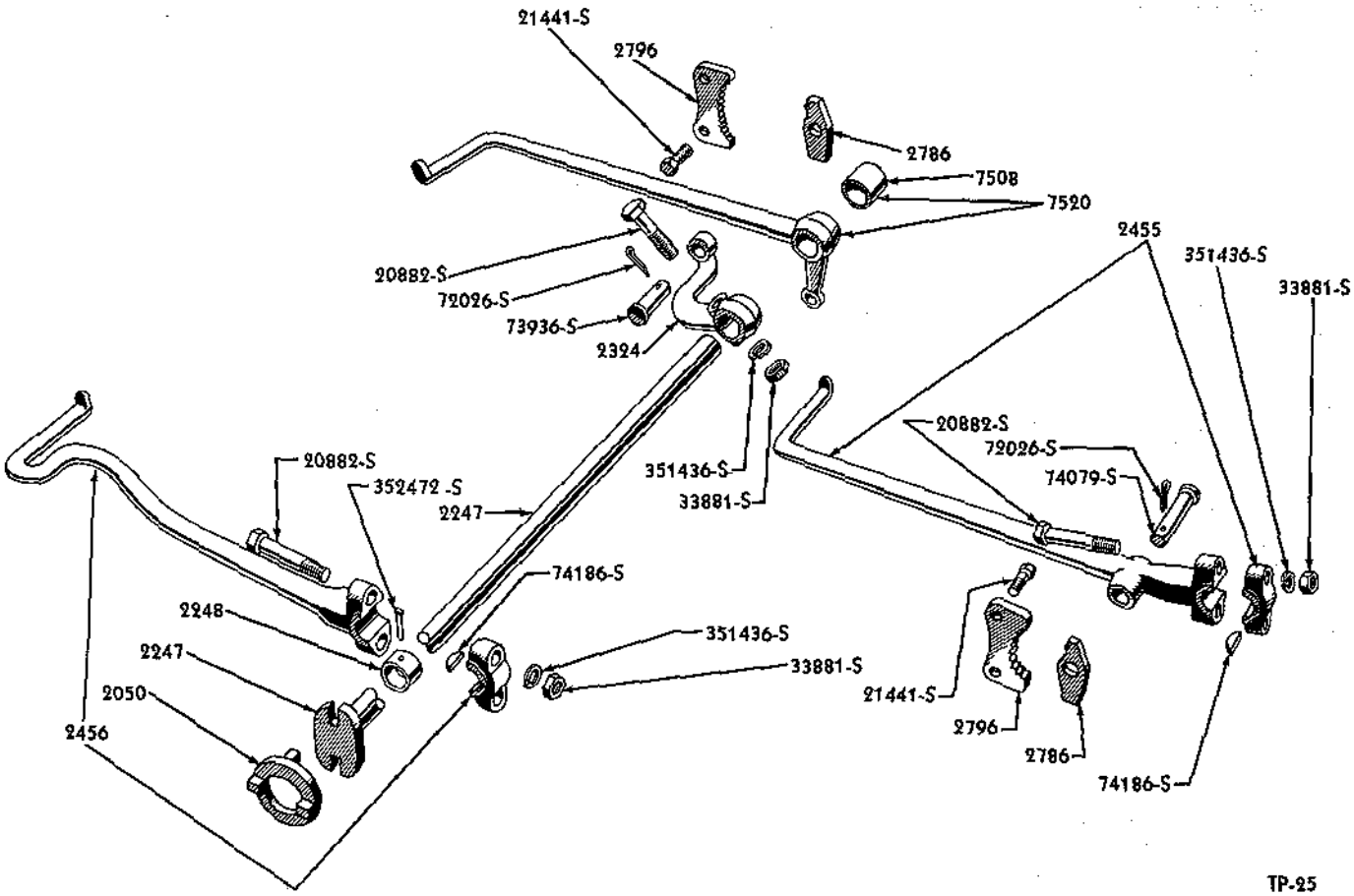

TP-25

1939-47 CLUTCH AND BRAKE PEDALS

Basic numbers only shown on illustration. Order by Part Numbers shown in list of parts.

PART NUMBER	PART NAME		NO. REQ'D	MODEL	YEAR 19__
	Brake Controls				
9N 2304	Bracket (brake camshaft)		2	9N, 9NAN, 2N, 2NAN	39-47
	60414-S	Rivet (camshaft bracket)	8	9N, 9NAN, 2N, 2NAN	39-47
8N 2315	Lever (brake camshaft)		1	8N	48
8N 2322	Spring (brake camshaft hole cover)		2	8N	48
9N 2324	Arm (brake pawl)		1	9N, 9NAN, 2N, 2NAN	39-47
	73936-S7	Pin (pawl to pawl arm)-clevis-1/2" x 1-1/4"	1	9N, 9NAN, 2N, 2NAN	39-47
	72026-S7	Cotter pin-1/8" x 7/8"	1	9N, 9NAN, 2N, 2NAN	39-47
	20882-S7	Bolt (pawl arm to brake shaft)-7/16"-20 x 2-1/4"	1	9N, 9NAN, 2N, 2NAN	39-47
	351436-S7	Lockwasher-7/16"	1	9N, 9NAN, 2N, 2NAN	39-47
	33881-S7	Nut-hex-7/16"-20	1	9N, 9NAN, 2N, 2NAN	39-47
8N 2324	Arm (brake pawl)		1	8N	48
	20894-S7	Bolt (brake pawl arm)-7/16"-20 x 1.68" hex head	1	8N	48
	34808-S7	Lockwasher (brake pawl arm)-7/16" standard	1	8N	48
	74186-S	Key (brake pawl arm to shaft)-Woodruff	1	8N	48

Ford

TRACTOR PARTS CATALOGUE

PART NUMBER	PART NAME		NO. REQ'D	MODEL	YEAR 19__
9N 2455-A	Pedal (brake)-with cap-RH		1	9N, 9NAN, 2N, 2NAN	39-47
	74079-S7	Pin (pedal to pawl)-clevis-1/2" x 2-5/8"	1	9N, 9NAN, 2N, 2NAN	39-47
	72026-S7	Cotter pin-1/8" x 7/8"	1	9N, 9NAN, 2N, 2NAN	39-47
	20882-S7	Bolt (cap to pedal)-7/16"-20 x 2-1/4"-hex head	2	9N, 9NAN, 2N, 2NAN	39-47
	351436-S	Lockwasher-7/16"	2	9N, 9NAN, 2N, 2NAN	39-47
	33881-S7	Nut-7/16"-20	2	9N, 9NAN, 2N, 2NAN	39-47
	74186-S	Key (pedal cap to shaft)-Woodruff-1/4" x 1-1/8"	1	9N, 9NAN, 2N, 2NAN	39-47
8N 2455	Pedal (brake)-RH		1	8N	48
	20894-S7	Bolt (brake pawl arm)-7/16"-20 x 1.68" hex head	1	8N	48
	34808-S7	Lockwasher (brake pawl arm)-7/16" standard	1	8N	48
	74186-S	Key (brake pawl arm to shaft)-Woodruff	1	8N	48
9N 2456-A	Pedal (brake)-with cap-LH		1	9N, 9NAN, 2N, 2NAN	39-47
	20882-S7	Bolt (cap to pedal)-7/16"-20 x 2-1/4"-hex head	2	9N, 9NAN, 2N, 2NAN	39-47
	351436-S	Lockwasher-7/16"	2	9N, 9NAN, 2N, 2NAN	39-47
	33881-S7	Nut-7/16"-20	2	9N, 9NAN, 2N, 2NAN	39-47
	74186-S	Key (pedal cap to shaft)-Woodruff-1/4" x 1/8"	1	9N, 9NAN, 2N, 2NAN	39-47
8N 2456	Pedal (brake)-LH		1	8N	48
	20894-S7	Bolt (brake pawl arm)-7/16"-20 x 1.68" hex head	1	8N	48
	34808-S7	Lockwasher (brake pawl arm)-7/16" standard	1	8N	48
	74186-S	Key (brake pawl arm to shaft)-Woodruff	1	8N	48
	73912-S7	Pin (brake rod assy)-clevis-3/8" x 1 1/16"	2	8N	48
	72010-S7	Cotter pin (brake rod clevis pin)-1/8" x 5/8"	2	8N	48
8N 2465	Rod assy (brake)		1	8N	48
	33925-S	Nut (brake rod assy)-3/8"-24 hex check	1	8N	48
	97013-S	Clevis (brake rod assy)-3/8" x 2 1/2" adjustable	1	8N	48
78 2477	Bushing (brake cross shaft)		2	9N, 9NAN, 2N, 2NAN, 8N	39-48
8N 2516	Shaft (brake pedal cross)		1	8N	48
9N 2786	Pawl (brake)-2.68" long x .39" thick		2	9N, 9NAN, 2N, 2NAN	39-47
9N 2786	Pawl (brake)-2.68" long x .39" thick-RH only		1	8N	48
8N 2786	Pawl (brake)-1.68" long x .39" thick-LH		1	8N	48
	73951-S7	Pin (brake pawl to pawl arm)-clevis-hardened	2	8N	48
	72035-S7	Cotter pin (brake pawl)	2	8N	48
	74186-S	Key (pawl arm to brake shaft)	2	8N	48
9N 2796	Sector (brake pawl)-13 teeth		1	9N, 9NAN, 2N, 2NAN	39-47
8N 2796	Sector (brake pawl)-11 teeth		2	8N	48
	21441-S7	Bolt (sector to power take-off shifter plate)-7/16"-14 x 1 1/4"	2	9N, 9NAN, 2N, 2NAN, 8N	39-48
M 2822	Enamel (vermillion)-air dry			Refer to Paints Group	
M 2824	Enamel (black)-air dry			Refer to Paints Group	
M 2888	Paint (tractor grey)			Refer to Paints Group	

Ford

TRACTOR PARTS CATALOGUE

PART NUMBER	PART NAME	NO. REQ'D.	MODEL	YEAR 19____

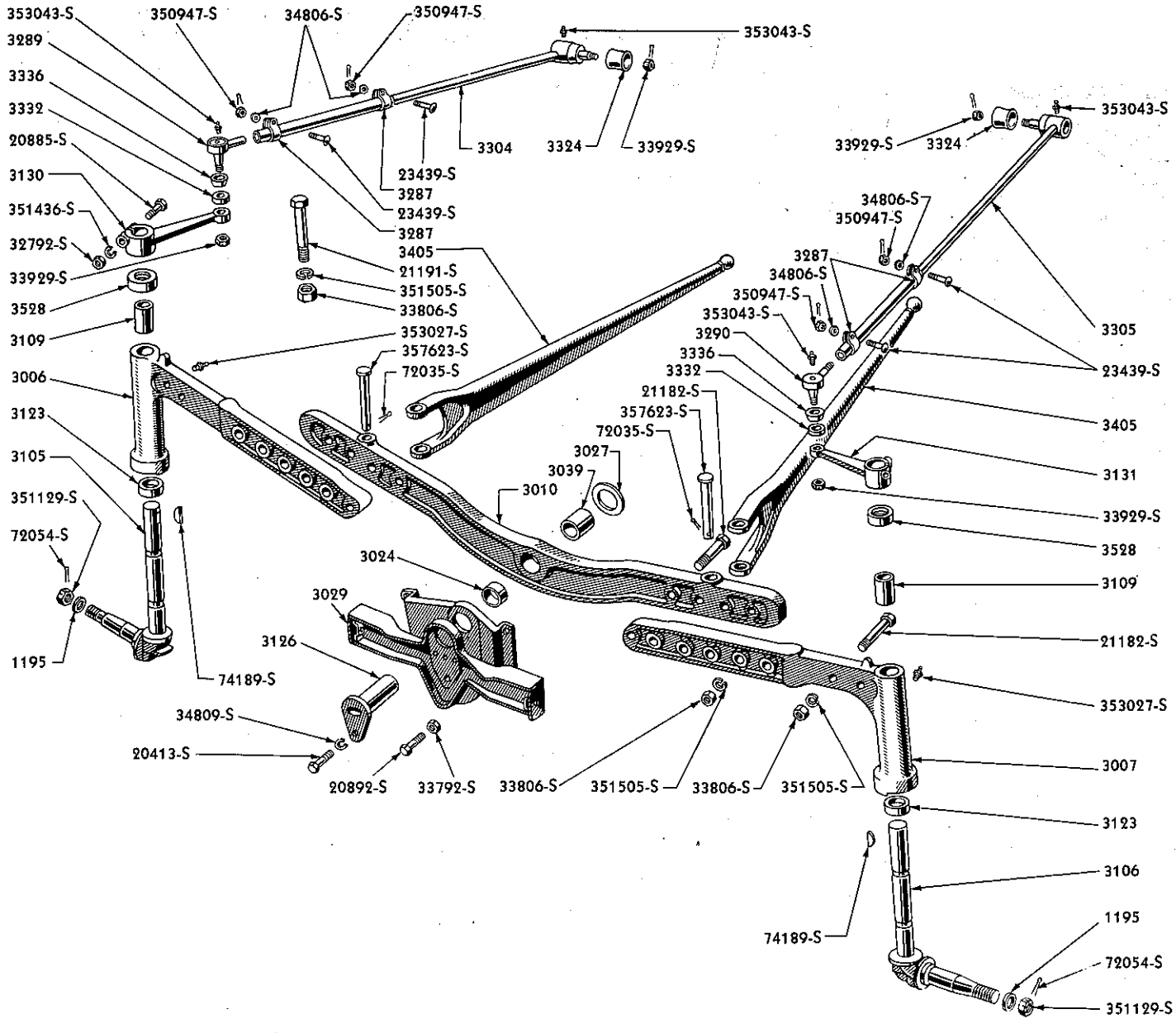

TP-17

1948 FRONT AXLE AND RELATED PARTS

Basic numbers only shown on illustration. Order by Part Numbers shown in list of parts.

Front Axle

PART NUMBER	PART NAME	NO. REQ'D	MODEL	YEAR 19—
9N 3006-A	Axle assy (front)-RH-with 2N-3109 bushing	1	9N, 9NAN, 2N, 2NAN	39-47
8N 3006	Axle assy (front)-RH	1	8N	48
	353027-S7 Fitting-lubricator	1	9N, 9NAN, 2N, 2NAN, 8N	39-48
	21182-S7 Bolt (front right axle assy to center axle)-5/8"-18 x 2.88"	2	9N, 9NAN, 2N, 2NAN, 8N	39-48
	351505-S7 Washer-5/8"	2	9N, 9NAN, 2N, 2NAN, 8N	39-48
	33806-S7 Nut-5/8"-18	2	9N, 9NAN, 2N, 2NAN, 8N	39-48
9N 3007-A	Axle assy (front)-LH-with 2N-3109 bushing	1	9N, 9NAN, 2N, 2NAN	39-47
8N 3007	Axle assy (front)-LH	1	8N	48
	353027-S7 Fitting-lubricator	1	9N, 9NAN, 2N, 2NAN, 8N	39-48
	21182-S7 Bolt (front left axle assy to center axle)-5/8"-18 x 2.88"	2	9N, 9NAN, 2N, 2NAN, 8N	39-48
	351505-S7 Washer-5/8"	2	9N, 9NAN, 2N, 2NAN, 8N	39-48
	33806-S7 Nut-5/8"-18	2	9N, 9NAN, 2N, 2NAN, 8N	39-48
9N 3010-A	Axle assy (front)-center-without attaching hole for drag links	1	9N, 9NAN, 2N, 2NAN	39-47
8N 3010	Axle assy (front)-center-contains holes for attaching drag links	1	8N	48
8N 3024	Spacer (front axle)	as reqd	8N	48
8N 3027	Spacer (front axle)	1	8N	48
2N 3029	Support assy (front axle)-use with 2N-3126	1	2N, 2NAN	43-44
2N 3029-B	Support assy (front axle)-use with 2N-3126-D	1	2N, 2NAN after Serial 167,488, 9N, 8NAN	43-48
	20892-S7 Bolt (front axle support to oil pan)-7/16"-20 x 1-1/8"	6	9N, 9NAN, 2N, 2NAN, 8N	39-48
	20878-S7 Bolt (front axle support to oil pan)-7/16"-20 x 1.25" use to replace 20892-S7 when oil pan flange is too thick	6	9N, 9NAN, 2N, 2NAN, 8N	39-48
	33792-S7 Nut-7/16"-20	6	9N, 9NAN, 2N, 2NAN, 8N	39-48
9N 3039	Bushing (axle)-center-split with oil hole	1	9N, 9NAN, 2N, 2NAN	39-47
2N 3039	Bushing (axle)-center-solid without oil hole	1	8N	48
9N 3105	Spindle assy (front axle)-not serviced-order 2N-3105 with 2N-3130 for RH or 2N-3106 with 2N-3131 for LH	2	9N, 9NAN, 2N, 2NAN before Serial 109,503	39-43

PART NUMBER	PART NAME	NO. REQ'D	MODEL	YEAR 19__
2N 3105	Spindle assy (front axle)-RH	1	2N,2NAN after Serial 109,502	43-47
8N 3105	Spindle assy (front axle)-RH	1	8N	48
2N 3106	Spindle assy (front axle)-LH	1	2N,2NAN after Serial 109,502	43-47
8N 3106	Spindle assy (front axle)-LH	1	8N	48
	351129-S Nut-castle-3/4"-16	2	9N,9NAN,2N,2NAN,8N	39-48
	72054-S Cotter pin-5/32"-1 1/4"	2	9N,9NAN,2N,2NAN,8N	39-48
2N 3109	Bushing (spindle)	4	9N,9NAN,2N,2NAN,8N	39-48
9N 3122	Pin (spindle)-use only with 9N-3105	2	9N,9NAN,2N,2NAN	39-43
9N 3123-A	Bearing (front axle spindle)	2	9N,9NAN,2N,2NAN,8N	39-48
2N 3126	Pin (front axle)-magneto ignition-use only with 2N-3029	1	2N,2NAN	43-44
2N 3126-B	Pin (front axle)-battery ignition-optional with 2N-3126-E-use only with 2N-3029	1	2N,2NAN	43-44
2N 3126-D	Pin (front axle)-battery ignition-use only with 2N-3029-B	1	2N,2NAN after Serial 167,488,8N	43-48
2N 3126-E	Pin (front axle)-battery ignition-optional with 2N-3126-B-use only with 2N-3029	1	2N,2NAN	43-44
	20413-S7 Bolt (axle pin to axle support) -1/2"-20 x 1-1/8"	1	2N,2NAN	39-44
	34809-S7 Lockwasher-1/2"	1	2N,2NAN	39-44
9N 3130	Arm (front axle spindle)-RH-use only with 9N-3105	1	9N,9NAN	39-43
2N 3130	Arm (front axle spindle)-RH	1	2N,2NAN	43-47
8N 3130	Arm (front axle spindle)	2	8N	48
9N 3131	Arm (front axle spindle)-LH-use only with 9N-3105	1	9N,9NAN	39-43
2N 3131	Arm (front axle spindle)-LH	1	2N,2NAN	43-47
	351436-S7 Lockwasher-use only with 9N-3105	2	9N,9NAN	39-43
	33787-S7 Nut-use only with 9N-3105	2	9N,9NAN	39-43
	74189-S Key (spindle arm to spindle)-Woodruff	2	9N,9NAN,2N,2NAN,8N	39-48
	20885-S7 Bolt (spindle arm to spindle)-7/16"-20 x 2.56" hex	2	9N,9NAN,2N,2NAN,8N	39-48
	33792-S7 Nut (spindle arm to spindle)-7/16"-20 hex	2	9N,9NAN,2N,2NAN,8N	39-48
	351436-S7 Lockwasher (spindle arm to spindle)-7/16"	2	9N,9NAN,2N,2NAN,8N	39-48
11A 3289-A	End assy (spindle arm to connecting rod)	2	9N,9NAN,2N,2NAN	39-47
8N 3289	End assy (spindle arm to connecting rod)-RH thread	1	8N	48
8N 3290	End assy (spindle arm to connecting rod)-LH thread	1	8N	48

Steering Linkage

PART NUMBER	PART NAME		NO. REQ'D	MODEL	[illegible]
9N 3304	Link assy (steering drag)-RH-37.9" assembled length		1	9N, 9NAN, 2N, 2NAN	39-47
8N 3304	Link assy (steering drag)-RH-37.75" assembled length		1	8N	48
9N 3305	Link assy (steering drag)-LH-37.9" assembled length		1	9N, 9NAN, 2N, 2NAN	39-47
8N 3305	Link assy (steering drag)-LH-36.30" assembled length		1	8N	48
	22228-S7	Bolt (steering drag link clamp) -5/16"-24 x 1-1/4"	2	9N, 9NAN, 2N, 2NAN	39-47
	23439-S7	Bolt (steering drag link clamp) -5/16"-24 x 1 1/4"-carriage	4	8N	48
	34029-S7	Nut-castle-5/16"-24	2	9N, 9NAN, 2N, 2NAN	39-47
	72003-S7	Cotter pin-1/16" x 1/2"	2	9N, 9NAN, 2N, 2NAN	39-47
	353043-AS7	Fitting-lubricator	4	9N, 9NAN, 2N, 2NAN	39-47
	33832-S7	Nut (ball stud to steering gear sector)	2	9N, 9NAN, 2N, 2NAN	39-47
	72025-S7	Cotter pin-3/32" x 7/8"	2	9N, 9NAN, 2N, 2NAN	39-47
	350947-S7	Nut-special hex (spindle connecting rod clamp to drag link)	2	8N	48
	350947-S7	Nut (spindle connecting rod clamp to drag link)-5/16"-24-hex	4	8N	48
	34806-S7	Lockwasher (spindle connecting rod clamp to drag link)-5/16"	4	8N	48
9N 3324	Cover (front axle dust)		2	9N, 9NAN, 2N, 2NAN, 8N	39-48
78 3332-A	Seal (steering linkage ball stud)-1" O.D. x .62" I.D. x .25" thick		2	9N, 9NAN, 2N, 2NAN	39-47
8N 3332	Seal (steering linkage ball stud)-1.50" O.D. x 1.16" I.D. x .50" deep with .58" dia. hole		2	8N	48
78 3336	Retainer (steering linkage ball stud)		2	9N, 9NAN, 2N, 2NAN	39-47
2N 3405	Rod assy (front radius)		2	9N, 9NAN, 2N, 2NAN	39-47
	21191-S7	Bolt (radius rod to front axle) -5/8"-18 x 5-5/16"	2	9N, 9NAN, 2N, 2NAN	39-47
	351505-S7	Washer-5/8"	2	9N, 9NAN, 2N, 2NAN	39-47
	33806-S34	Nut-5/8"-18	2	9N, 9NAN, 2N, 2NAN	39-47
8N 3405	Rod assy (front radius)		2	8N	48
	357623-S7	Pin (radius rod to front axle)	2	8N	48
9N 3440	Cap (radius rod ball)		2	9N, 9NAN, 2N, 2NAN	39-47
8N 3440	Step and ball cap combination (radius rod)		2	8N	48
9N 3442	Spacer (radius rod ball)		2	9N, 9NAN, 2N, 2NAN, 8N	39-48
	88528-S7	Stud (radius rod ball spacer to transmission case)-screw-7/16"-20 & 7/16"-14 x 3 3/16"	4	9N, 9NAN, 2N, 2NAN	39-47
	88398-S7	Stud (radius rod ball spacer to transmission case)-screw-7/16"-20 & 7/16"-14 x 1 9/16"	2	9N, 9NAN, 2N, 2NAN	39-47
	88541-S7	Stud (radius rod ball spacer to transmission case)-screw-7/16"-20 & 7/16"-14 x 3 3/8"	4	8N	48
	88413-S7	Stud (radius rod ball spacer to transmission)-screw-7/16"-20 & 7/16"-14 x 1 3/4"	2	8N	48
	33792-S7	Nut (radius rod ball spacer stud)-7/16"-20 hex	6	9N, 9NAN, 2N, 2NAN, 8N	39-48
	351436-S7	Lockwasher (radius rod ball spacer stud)	6	9N, 9NAN, 2N, 2NAN, 8N	39-48

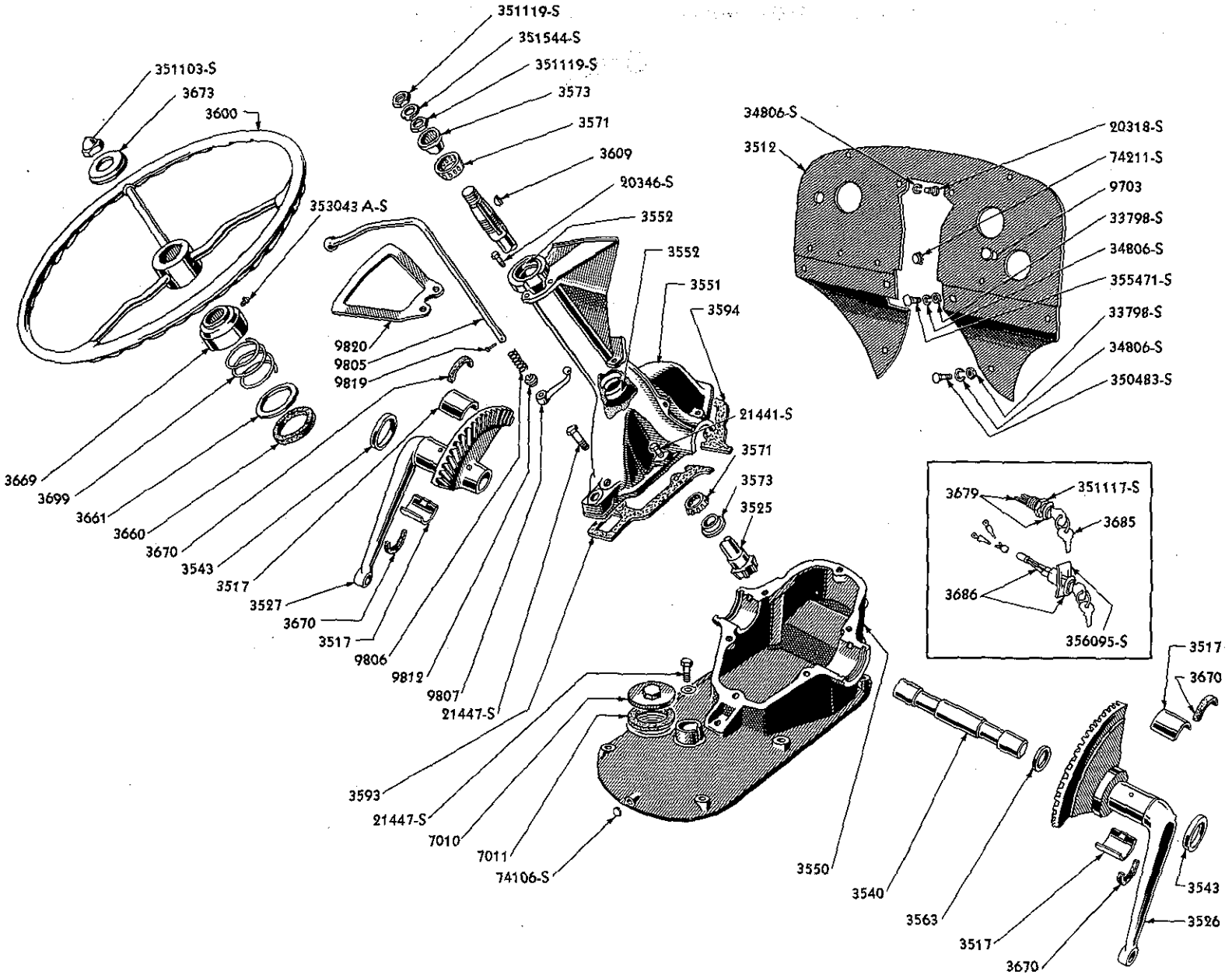

TP-39

1939-47 STEERING GEAR AND RELATED PARTS

Basic numbers only shown on illustration. Order by Part Numbers shown in list of parts.

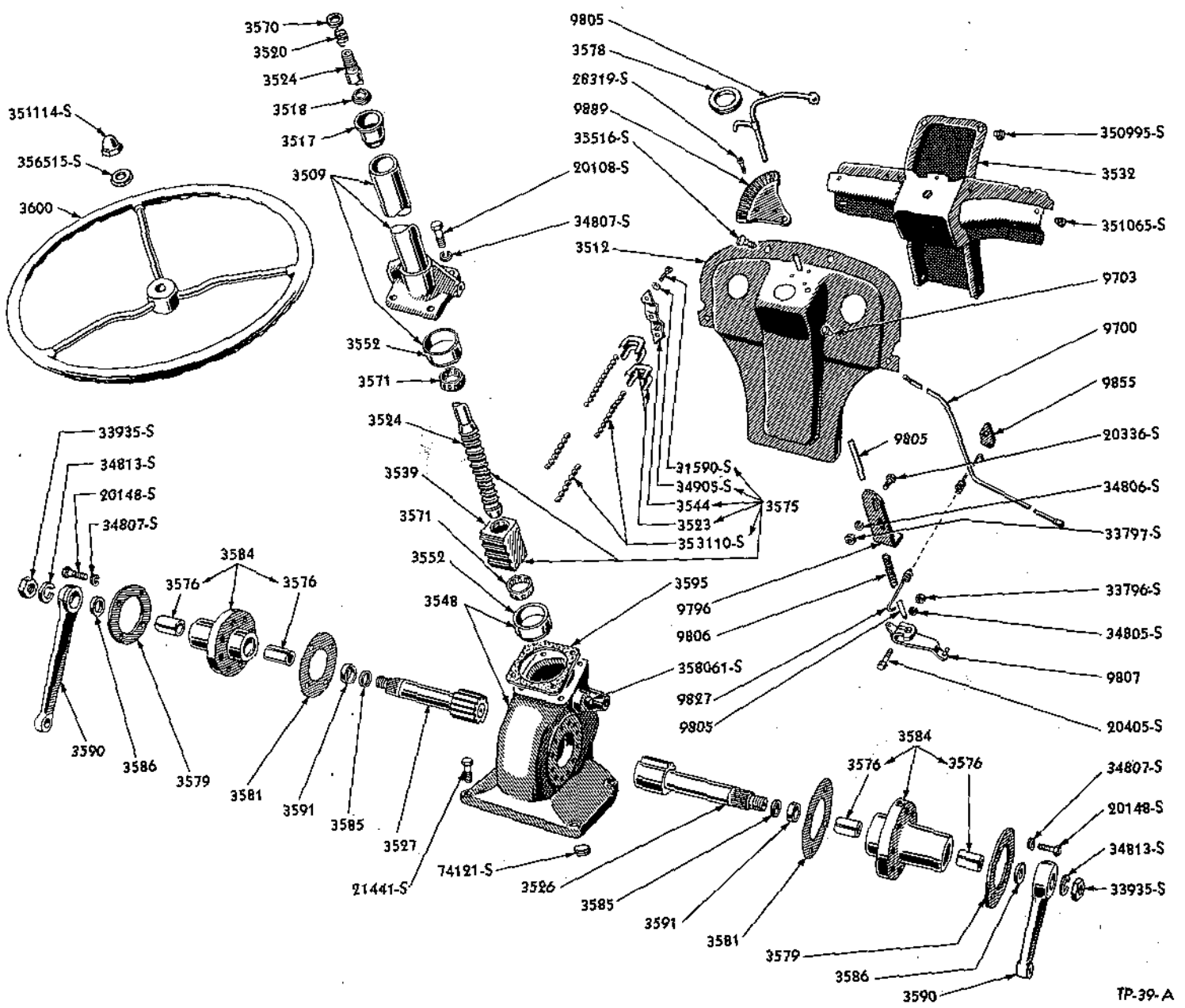

1948 STEERING GEAR AND RELATED PARTS

Basic numbers only shown on illustration. Order by Part Numbers shown in list of parts.

Ford

TRACTOR PARTS CATALOGUE

Steering Gear and Instrument Panel

PART NUMBER	PART NAME	NO. REQ'D	MODEL	YEAR 19__
8N 3503	Gear assy (steering)-11.4 to 1 ratio	1	8N	48
8N 3509	Cover & tube assy (steering housing end)	1	8N	48
	20108-S Bolt (cover to housing)-hex head	4	8N	48
	34807-S Lockwasher (cover to housing)	4	8N	48
9N 3512-A	Panel assy (instrument)-use with 9N-3551-D-upper steering housing with foot starter button	1	9N, 2N after Serial 80,769	39-47
9N 3512-B	Panel assy (instrument)-use with 9N-3551-A-upper steering housing with dash starter button	1	9N, 9NAN	39-42
9NAN 3512-A	Panel assy (instrument)	1	9NAN, 2NAN	39-48
	74211-S7 Plug (light switch hole)-button -3/8"-optional with 9N-11664	1	9N, 9NAN, 2N, 2NAN	39-47
	9N-11664 Plug (light switch hole)-rubber-3/8"	1	9N, 9NAN, 2N, 2NAN	39-47
	350483-S7 Bolt (instrument panel to upper housing lower to battery support)	2	9N, 9NAN, 2N, 2NAN	39-47
	34806-S7 Lockwasher-5/16"	2	9N, 9NAN, 2N, 2NAN	39-47
	33798-S7 Nut-5/16"-24	2	9N, 9NAN, 2N, 2NAN	39-47
	355471-S7 Bolt (instrument panel to upper housing upper)-5/16"-24 x 3/4"	2	9N, 9NAN, 2N, 2NAN	39-47
	34806-S7 Lockwasher-5/16"	2	9N, 9NAN, 2N, 2NAN	39-47
	33798-S7 Nut-5/16"-24	2	9N, 9NAN, 2N, 2NAN	39-47
	20318-S7 Bolt (instrument panel to upper housing)-5/16"-18 x 9/16"	2	9N, 9NAN, 2N, 2NAN	39-47
8N 3512	Panel assy (instrument)	1	8N	48
	35516-S7 Screw (instrument panel to hood)-3/8"-24 x .62"-round head-thin	4	8N	48
9N 3517	Bearing (steering sector)	4	9N, 9NAN, 2N, 2NAN	39-47
8N 3517	Bearing assy (steering column)	1	8N	48
8N 3518	Seat (steering column bearing spring)	1	8N	48
8N 3520	Spring (steering column bearing)	1	8N	48
8N 3523	Guide (steering gear ball return)	4	8N	48
8N 3524	Worm & shaft assy (steering gear)	1	8N	48
9N 3525	Shaft and pinion (steering)	1	9N, 9NAN, 2N, 2NAN	39-47
	351119-S7 Nut (steering post)-13/16"-28-hex	2	9N, 9NAN, 2N, 2NAN	39-47
	351544-S7 Lockwasher (steering post)	1	9N, 9NAN, 2N, 2NAN	39-47
9N 3526	Sector (steering gear)-RH	1	9N, 9NAN, 2N, 2NAN	39-47
8N 3526	Shaft (steering gear sector)-RH	1	8N	48
	34813-S7 Lockwasher (steering gear sector)-3/4"	2	8N	48
	33935-S7 Nut (steering gear sector)-3/4" x 16-check	2	8N	48
9N 3527	Sector (steering gear)-LH	1	9N, 9NAN, 2N, 2NAN	39-47
8N 3527	Shaft (steering gear sector)-LH	1	8N	48
8N 3528	Seal (steering arm dust)-rubber composition	2	9N, 9NAN, 2N, 2NAN, 8N	39-48
	351065-S7 Nut (instrument panel support)-3/8"-24-plug	1	8N	48
	350995-S7 Nut (instrument panel support)-5/16"-24-plug	1	8N	48
8N 3532	Support assy (instrument panel to hood)	1	8N	48
8N 3539	Nut (steering gear ball)	1	8N	48
9N 3540	Shaft (steering sector)	1	9N, 9NAN, 2N, 2NAN	39-47
9N 3543-A	Washer (steering sector thrust)-outer-.122" thick	1	9N, 9NAN, 2N, 2NAN	39-47
9N 3543-B	Washer (steering sector thrust)-outer-.124" thick	1	9N, 9NAN, 2N, 2NAN	39-47

PART NUMBER	PART NAME	NO. REQ'D	MODEL	YEAR 19—
9N 3543-C	Washer (steering sector thrust)-outer-.126" thick	1	9N, 9NAN, 2N, 2NAN	39-47
8N 3544	Clamp (steering gear ball return guide)	1	8N	48
	31590-S Bolt-1/4"-28 x 5/16" fillister head	3	8N	48
	34905-S Lockwasher-internal tooth	3	8N	48
8N 3548	Housing assy (steering gear)	1	8N	48
	358061-S Plug (housing filler elbow)-3/8" pipe	1	8N	48
	74121-S Plug (steering gear housing)-expansion	1	8N	48
	21441-S Bolt (steering gear housing to transmission case)-7/16"-14 x 1.25"-hex head	4	8N	48
9N 3550-A	Housing (steering gear)-lower-use with 9N-3551-E and 9N-7229-A	1	9N, 9NAN, 2N, 2NAN	39-42
9N 3550-C	Housing (steering gear)-lower-use with 9N-3551-D and 9N-7229-B	1	2N, 2NAN after Serial 47,507	42-47
	21447-S7 Bolt (gear shifter housing to transmission housing)-7/16"-14 x 1-1/2"	6	9N, 9NAN, 2N, 2NAN	39-47
	74106-S Plug-5/16" expansion	1	9N, 9NAN, 2N, 2NAN	39-47
	21459-S7 Bolt-7/16"-14 x 1 5/8"	2	9N, 9NAN, 2N, 2NAN	39-42
9N 3551-A	Housing (steering)-upper-not serviced-order 9N-3551-E, 9N-3512-B & 2N-10732	1	9N, 9NAN	39-43
9N 3551-D	Housing (steering)-upper-with foot starter button	1	2N, 2NAN after Serial 80,769	42-47
9N 3551-E	Housing (steering)-upper-with instrument panel starter button	1	9N, 9NAN before Serial 80,770	39-42
	21447-S7 Bolt (upper to lower housing)-7/16"-14 x 1 1/2"	2	9N, 9NAN, 2N, 2NAN	42-47
	21441-S7 Bolt (upper to lower housing)-7/16"-14 x 1-1/4"	4	9N, 9NAN, 2N, 2NAN	42-47
	21445-S7 Bolt-7/16"-14 x 1.62"	6	9N, 9NAN, 2N, 2NAN	39-42
B 3552	Cup (steering gear lower bearing)-1.750" O.D. x 1.325" I.D. x 3/8"	2	9N, 9NAN, 2N, 2NAN	42-47
8N 3552	Cup (steering gear worm thrust bearing)-1.7520" O.D. x 1.324" I.D. x .380"	2	8N	48
9N 3563-A	Washer (steering sector thrust)-inner-.255" thick	1	9N, 9NAN, 2N, 2NAN	39-47
9N 3563-B	Washer (steering sector thrust)-inner-.250" thick	1	9N, 9NAN, 2N, 2NAN	39-47
9N 3563-C	Washer (steering sector thrust)-inner-.245" thick	1	9N, 9NAN, 2N, 2NAN	39-47
8N 3570	Seal (steering gear column)	1	8N	48
68 3571-A	Bearing (steering gear worm thrust roller)	1	9N, 9NAN, 2N, 2NAN	39-47
8N 3571	Bearing (steering gear worm thrust roller)	2	8N	48
9N 3573	Cone (shaft to housing bearing)	2	9N, 9NAN, 2N, 2NAN	39-47
8N 3575	Shaft & ball nut assy (steering)	1	8N	48
	353110-S Ball (steering shaft assy)	60	8N	48
8N 3576	Bushing (steering gear sector shaft)	4	8N	48
8N 3578	Grommet (steering column)	1	8N	48
8N 3579	Washer (steering gear housing)-side	2	8N	48

PART NUMBER	PART NAME	NO. REQ'D	MODEL	YEAR 19___
8N 3581	Gasket (steering gear housing side cover)	2	8N	48
8N 3584	Cover and bushing assy (steering gear side)	2	8N	48
	20148-S Bolt (steering gear side cover to housing)-hex head	8	8N	48
	34807-S Lockwasher	8	8N	48
8N 3585	Packing (steering gear sector shaft)	2	8N	48
8N 3586	Seal (steering gear sector shaft)-dust	2	8N	48
8N 3590	Arm (steering gear)	2	8N	48
8N 3591	Retainer (steering gear sector shaft packing)	2	8N	48
9N 3593-B	Gasket (upper to lower steering gear housing)-rear	1	9N, 9NAN, 2N, 2NAN	39-47
9N 3594	Gasket (upper to lower steering gear housing)-front	1	9N, 9NAN, 2N, 2NAN	39-47
8N 3595-A	Shim (steering gear housing end cover)-thickness .002"	as reqd	8N	48
8N 3595-B	Shim (steering gear housing end cover)-thickness .005"	as reqd	8N	48
8N 3595-C	Shim (steering gear housing end cover)-thickness .010"	as reqd	8N	48
8N 3595-D	Shim (steering gear housing end cover)-thickness .030"	as reqd	8N	48
9N 3598	Retainer (steering column oil)-use with steering cap less lubricator fitting	1	9N, 9NAN, 2N, 2NAN	39-42
9N 3600-B	Wheel assy (steering)-not serviced-order 2N-3600	1	9N, 9NAN	39-42
2N 3600	Wheel assy (steering)	1	9N, 9NAN, 2N, 2NAN	39-47
8N 3600	Wheel assy (steering)	1	8N	48
	351114-S Nut (steering wheel to shaft)-blind	1	8N	48
	356515-S7 Washer (steering wheel nut)	1	8N	48
B 3609	Key (steering wheel to shaft)-Woodruff-special #9	1	9N, 9NAN, 2N, 2NAN	39-47
9N 3660	Seal (steering gear dust)	1	9N, 9NAN, 2N, 2NAN	39-47
9N 3661	Retainer (steering gear dust seal)	1	9N, 9NAN, 2N, 2NAN	39-47
9N 3669	Cap (steering column)	1	9N, 9NAN, 2N, 2NAN	39-47
	353043-AS7 Fitting (steering column cap)-lubricator-1/4"-28	1	9N, 9NAN, 2N, 2NAN	39-47
9N 3670	Packing (steering sector)	4	9N, 9NAN, 2N, 2NAN	39-47
9N 3673	Washer (steering wheel nut)-use with 9N-3600-B	1	9N, 9NAN	39-42
2N 3673	Washer (steering wheel nut)-use with 2N-3600	1	2N, 2NAN	42-47
	351103-S7 Nut (steering wheel to shaft)	1	2N, 2NAN	42-47
2N 3679	Lock, cylinder and wire assy (ignition)-use with upper steering housing having round hole for lock	1	2N, 2NAN	42-47
8N 3679	Lock, cylinder & wire assy (ignition)	1	8N	48
	356095-S2 Nut (ignition lock to steering gear housing)	1	2N, 2NAN, 8N	43-48
9N 3685-A	Key (ignition)-No. 1050 to 1300	as reqd	9N, 9NAN, 2N, 2NAN	39-42
9N 3685-B	Key (ignition)-Universal Series 1053	as reqd	2N, 2NAN, 8N after Serial 76,000	42-48
9N 3686-C	Lock and cylinder assy (ignition)-use with upper steering housing having oblong hole for lock	1	9N, 9NAN, 2N, 2NAN	39-43
	351117-S7 Nut (lock ignition)-thread type	1	9N, 9NAN, 2N, 2NAN	39-43
9N 3699	Spring (steering gear dust seal)	1	9N, 9NAN, 2N, 2NAN	39-47

Ford

TRACTOR PARTS CATALOGUE

PART NUMBER	PART NAME	NO. REQ'D	MODEL	YEAR 19

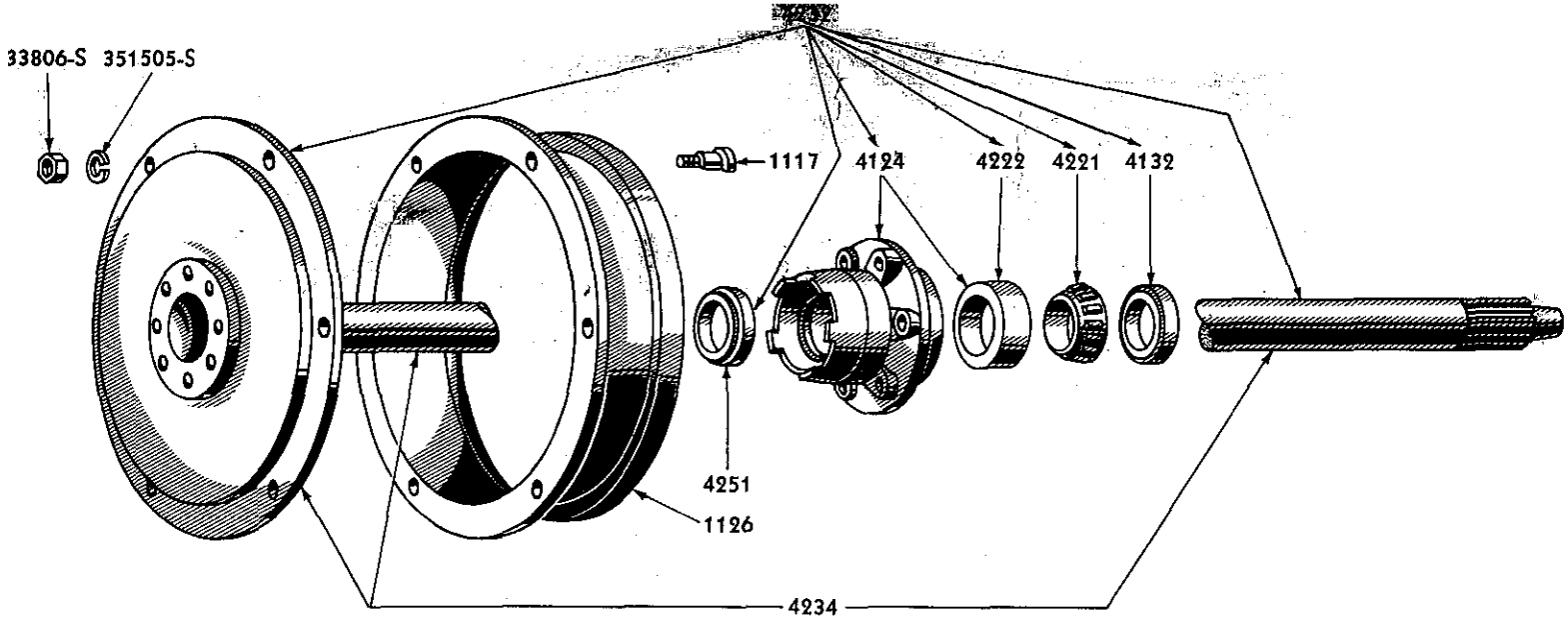

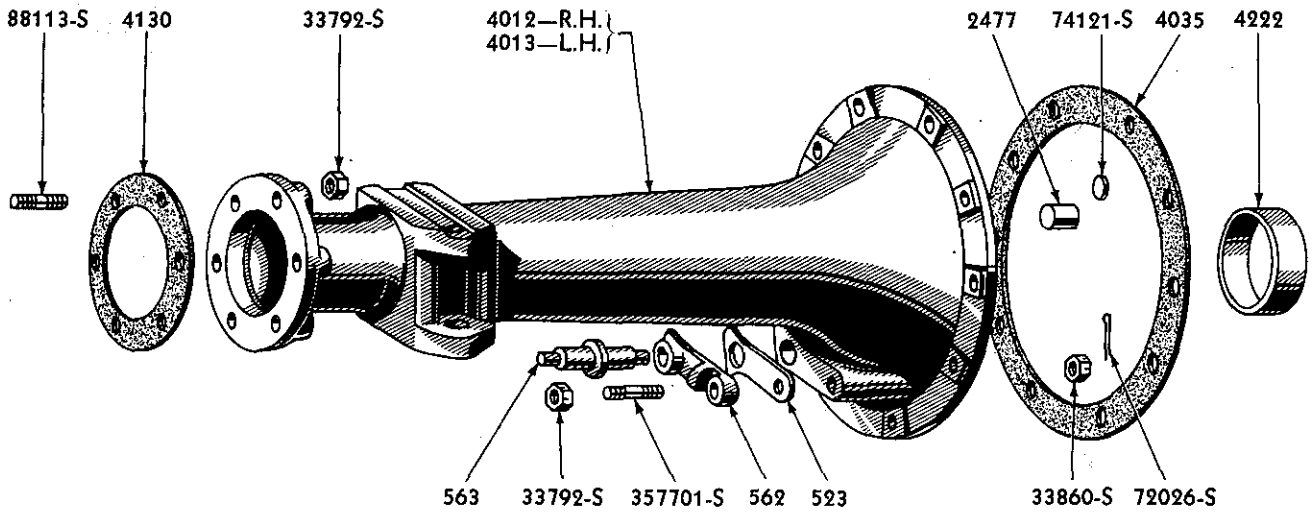

TP-27

1939-47 REAR AXLE SHAFT, HOUSING AND RELATED PARTS

Basic numbers only shown on illustration. Order by Part Numbers shown in list of parts.

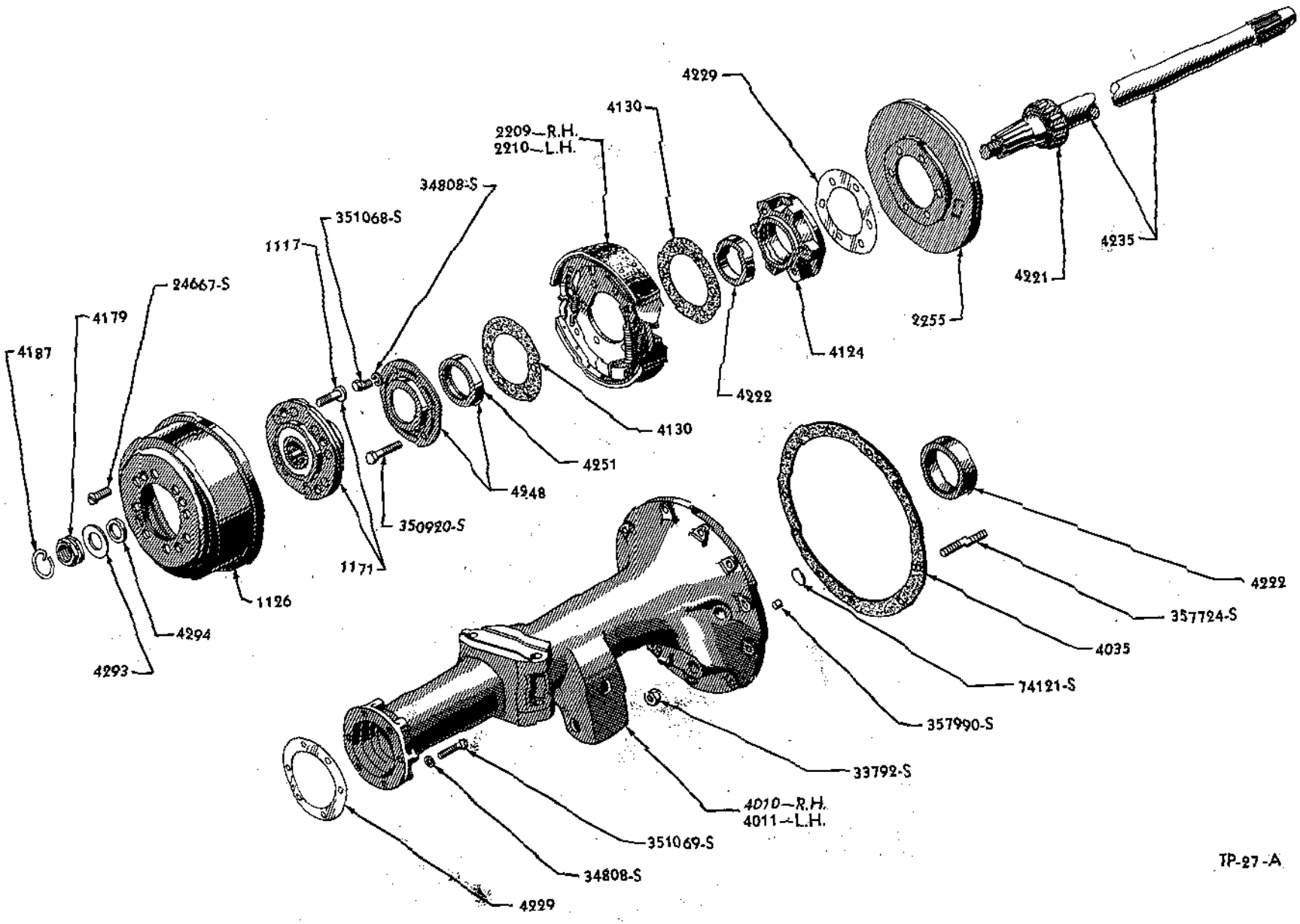

1948 REAR AXLE SHAFT, HOUSING AND RELATED PARTS

Basic numbers only shown in illustration. Order by Page Numbers shown in list of parts

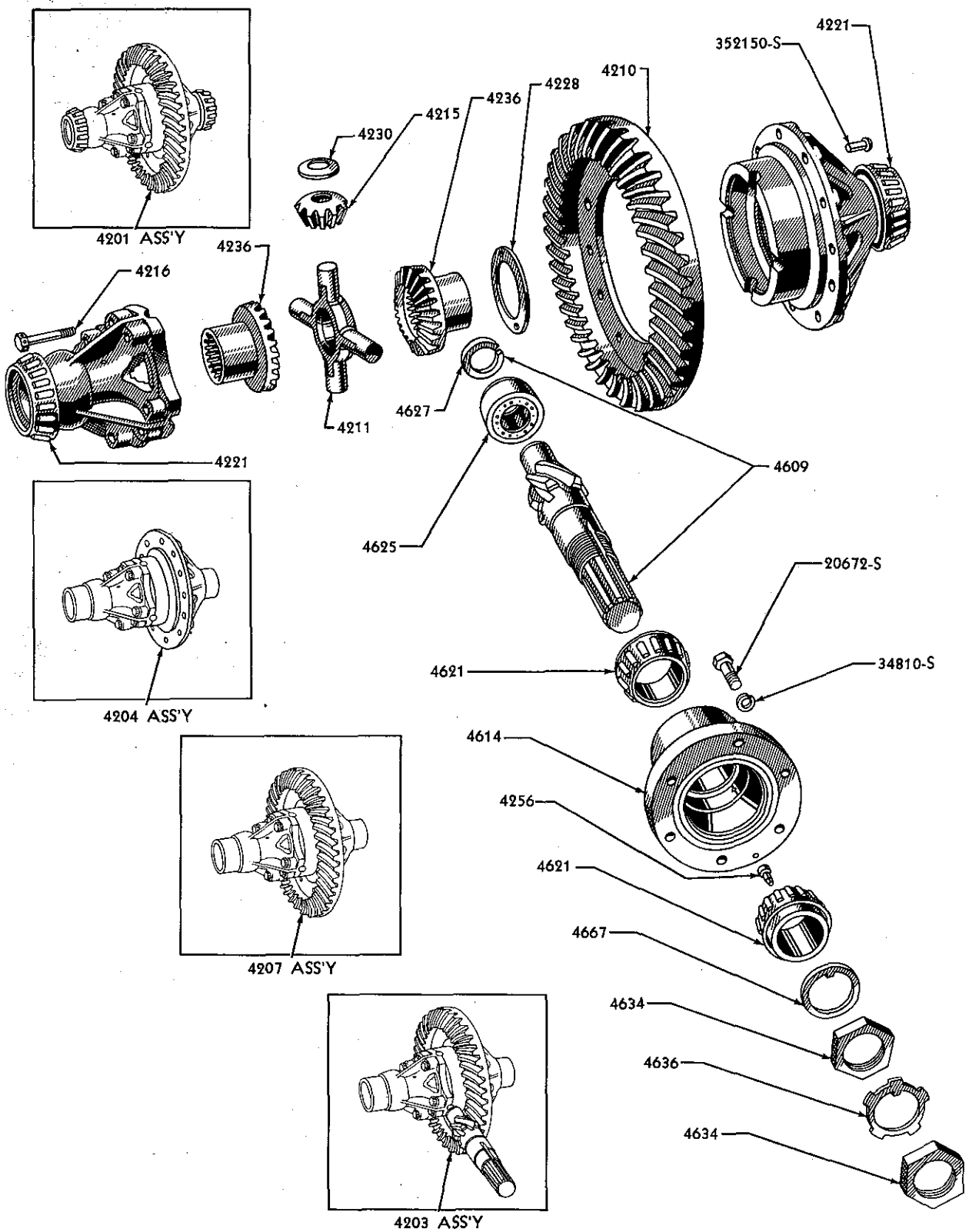

TP-18

1939-48 DIFFERENTIAL ASS'Y. WITH DRIVE GEAR AND PINION

Basic numbers only shown on illustration. Order by Part Numbers shown in list of parts.

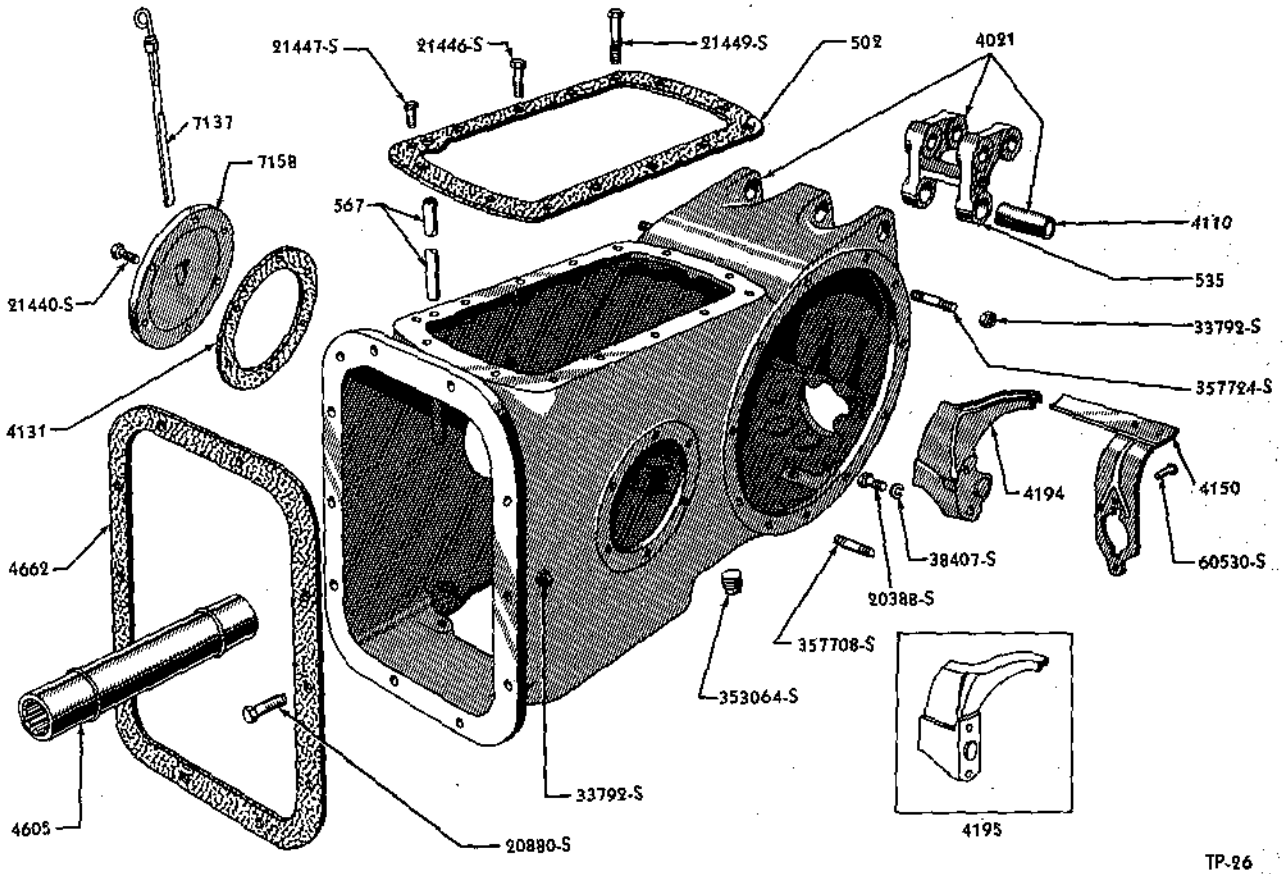

TP-26

1948 CENTER HOUSING, ROCKER AND RELATED PARTS

Basic numbers only shown on illustration. Order by Part Numbers shown in list of parts.

PART NUMBER	PART NAME	NO. REQ'D	MODEL	YEAR 19
	Rear Axle			
8N 4010-A	Housing assy (rear axle shaft)-RH	1	8N	48
8N 4011-A	Housing assy (rear axle shaft)-LH	1	8N	48
	74121-S Plug (rear axle housing)-expansion	2	9N, 9NAN, 2N, 2NAN, 8N	39-48
	357990-S Plug (rear axle housing assy)	1	8N	48
9N 4012-B	Housing assy (rear axle shaft)-RH-not serviced-order 2N-4012-A with 2N-4035	1	9N, 9NAN	39-43
2N 4012-A	Housing assy (rear axle shaft)-RH-use with 2N-4035 gasket to replace 9N-4012-B housing	1	9N, 9NAN, 2N, 2NAN	39-47
	88113-S7 Stud (rear axle housing to brake plate)	12	9N, 9NAN, 2N, 2NAN	39-47
	33792-S Nut (rear axle housing to brake plate stud)	12	9N, 9NAN, 2N, 2NAN	39-47
9N 4013-B	Housing assy (rear axle shaft)-LH-not serviced-order 2N-4013-A with 2N-4035	1	9N, 9NAN	39-43
2N 4013-A	Housing assy (rear axle shaft)-LH-use with 2N-4035 gasket to replace 9N-4013-B housing	1	9N, 9NAN, 2N, 2NAN	39-47

Ford
TRACTOR PARTS CATALOGUE

PART NUMBER	PART NAME	NO. REQ'D	MODEL	YEAR 19__
8N 4021	Housing and bushing assy (center)-Consists of the following 1-8N 4025 Housing assy 1-8N 535 Rocker 1-8N 4110 Bushing	1	8N	48
	33792-S7 Nut (rear axle center housing to right and left housing)-7/16"-20-hex	21	9N, 9NAN, 2N, 2NAN, 8N	39-48
	353064-S7 Plug-1/2" pipe	1	8N	48
	357708-S7 Stud (rear axle center housing to right and left housing)-7/16"-14 & 7/16"-20 x 2.12"	1	8N	48
	357724-S7 Stud (rear axle center housing to right and left housing)-7/16"-14 & 7/16"-20 x 1.86"	21	9N, 9NAN, 2N, 2NAN, 8N	39-48
9N 4025	Housing assy (center)	1	9N, 9NAN, 2N, 2NAN	39-47
2N 4035	Gasket (center housing to axle rear housing)	2	2N, 2NAN	45-47
2N 4035	Gasket (center housing to axle rear housing)	4	9N, 9NAN	39-45
8N 4110	Bushing (hydraulic lift rocker)	2	8N	48
9N 4124	Retainer and cup assy (rear axle shaft bearing)-6.20" O.D. x 2.98" thick	2	9N, 9NAN, 2N, 2NAN	39-47
8N 4124	Retainer and cup assy (rear axle shaft bearing)-6.25" O.D. x 1.85" thick	2	8N	48
	350920-S7 Bolt (bearing retainer and oil seal retainer to rear axle housing)	4	8N	48
	351068-S7 Bolt (bearing retainer and oil seal retainer to rear axle housing)	2	8N	48
	351069-S7 Bolt (bearing retainer and oil seal retainer to rear axle housing)	2	8N	48
	33792-S7 Nut (bearing retainer and oil seal retainer to rear axle housing)	4	8N	48
	34808-S7 Lockwasher (bearing retainer and oil seal retainer to rear axle housing)	4	8N	48
9N 4129	Gasket (power take-off cover)	1	9N, 9NAN, 2N, 2NAN, 8N	39-48
9N 4130-B	Gasket (axle housing to bearing retainer)	2	9N, 9NAN, 2N, 2NAN, 8N	39-48
9N 4130-B	Gasket (axle bearing retainer to brake plate)-6.20" O.D. x 4.38" I.D. x .020"	2	9N, 9NAN, 2N, 2NAN, 8N	39-48
8N 4130	Gasket (axle bearing retainer to brake plate)-6.20" O.D. x 4.38" I.D. x .010"	2	8N	48
9N 4131	Gasket (center side cover and shifter plate cover to housing)	2	9N, 9NAN, 2N, 2NAN, 8N	39-48
	9N-7158-C Cover assy (differential housing)	1	9N, 9NAN, 2N, 2NAN, 8N	39-48
	21440-S7 Bolt (cover to housing)-7/16"-14 x .75" hex head	4	9N, 9NAN, 2N, 2NAN, 8N	39-48
9N 4132	Collar (axle shaft bearing)-pressed on shaft to secure bearing	2	9N, 9NAN, 2N, 2NAN, 8N	39-48

Ford

TRACTOR PARTS CATALOGUE

PART NUMBER	PART NAME	NO. REQ'D	MODEL	YEAR 19
9N 4150	Trough assy (differential bearing)-oil	1	9N, 9NAN, 2N, 2NAN, 8N	39-48
	60530-S Rivet (trough to housing wall)-1/4" x 1-3/8"	2	9N, 9NAN, 2N, 2NAN, 8N	39-48
	60542-S Rivet (trough to housing wall)-1/4" x 1-1/2"-use when housing wall is heavier than standard	as reqd	9N, 9NAN, 2N, 2NAN	39-47
8N 4179	Nut (rear axle shaft)-1.25" x 18"-hex	2	8N	48
8N 4187	Snap ring (rear axle nut)-1.88" I.D.-.0915" wire	2	8N	48
8N 4194	Block (driving gear thrust)-has off-set boss for 9N-4150 differential bearing trough assy	1	8N	48
9N 4195	Block (driving gear thrust)	1	9N, 9NAN, 2N, 2NAN	39-47
	20388-S2 Bolt (block to center housing)-3/8"-16 x 1"-hex head	2	9N, 9NAN, 2N, 2NAN, 8N	39-48
	34807-S Lockwasher-3/8"	2	9N, 9NAN, 2N, 2NAN, 8N	39-48
9N 4201	Differential assy (rear axle)-6.66:1 ratio	1	9N, 9NAN, 2N, 2NAN, 8N	39-48
9N 4203	Gear (driving)-with pinion and differential gear case	1	9N, 9NAN, 2N, 2NAN, 8N	39-48
9N 4204	Case assy (differential gear)	1	9N, 9NAN, 2N, 2NAN, 8N	39-48
9N 4207	Gear and case assy-Consists of the following 1-9N 4204 Case assy 1-79 4210-A Gear 12- 352150-S Rivet	1	9N, 9NAN, 2N, 2NAN, 8N	39-48
79 4210-A	Gear (rear axle driving)-6.66 to 1 ratio	1	9N, 9NAN, 2N, 2NAN, 8N	39-48
	352150-S Rivet (drive gear to case)-rose head-7/16" x 1-1/2"	12	9N, 9NAN, 2N, 2NAN, 8N	39-48
9N 4211	Spider (differential)	1	9N, 9NAN, 2N, 2NAN, 8N	39-48
9N 4215	Pinion (differential)	4	9N, 9NAN, 2N, 2NAN, 8N	39-48
BB 4216-C	Screw (differential gear case)-1/2"-13 x 3"	8	9N, 9NAN, 2N, 2NAN, 8N	39-48
BB 4221-B	Cone and roller assy (differential)	2	9N, 9NAN, 2N, 2NAN, 8N	39-48
2N 4221	Cone and roller assy (axle shaft bearing)-wheel end	2	9N, 9NAN, 2N, 2NAN, 8N	39-48
BB 4222	Cup (axle shaft bearing)-differential end	2	9N, 9NAN, 2N, 2NAN, 8N	39-48
9N 4222	Cup (axle shaft bearing)-wheel end	2	9N, 9NAN, 2N, 2NAN, 8N	39-48
79 4228	Washer (differential gear thrust)	2	9N, 9NAN, 2N, 2NAN, 8N	39-48
8N 4229-A	Shim (rear axle bearing)-.008/.010"	as reqd	9N, 9NAN, 2N, 2NAN, 8N	39-48
8N 4229-B	Shim (rear axle bearing)-.015/.017"	as reqd	9N, 9NAN, 2N, 2NAN, 8N	39-48
8N 4229-C	Shim (rear axle bearing)-.020/.022"	as reqd	9N, 9NAN, 2N, 2NAN, 8N	39-48
79 4230	Washer (differential pinion thrust)	4	9N, 9NAN, 2N, 2NAN, 8N	39-48

Ford

TRACTOR PARTS CATALOGUE

PART NUMBER	PART NAME	NO. REQ'D	MODEL	YEAR 19__
9N 4232	Shaft (rear axle)-with bearing retainer seal and collar-Consists of the following 2-9N 4234-B Shaft 2-9N 4124 Retainer 2-2N 4221 Cone 2-9N 4251 Seal 2-9N 4222 Cup 2-9N 4132 Collar 12- 88113-S7 Stud	2	9N, 9NAN, 2N, 2NAN	39-47
9N 4234-B	Shaft and flange assy (rear axle)	2	9N, 9NAN, 2N, 2NAN	39-47
8N 4235	Shaft (rear axle)	2	8N	48
9N 4236	Gear (rear axle shaft differential)	2	9N, 9NAN, 2N, 2NAN, 8N	39-48
8N 4248	Oil seal assy (rear axle housing)	2	8N	48
9N 4251	Oil seal (rear axle wheel end bearing)	2	9N, 9NAN, 2N, 2NAN, 8N	39-48
BB 4256	Pin (differential pilot bearing)-overall length .44"	1	9N, 9NAN, 2N, 2NAN, 8N	39-48
8N 4293	Washer (rear axle shaft)	2	8N	48
8N 4294	Spacer (rear axle shaft)	2	8N	48
9N 4605	Shaft assy (drive)	1	9N, 9NAN, 2N, 2NAN, 8N	39-48
9N 4608	Pinion and bearing assy (driving)	1	9N, 9NAN, 2N, 2NAN, 8N	39-48
79 4609	Pinion and pilot bearing race assy (driving)	1	9N, 9NAN, 2N, 2NAN, 8N	39-48
BB 4614-B	Sleeve and bearing cups assy (driving pinion)-with dowel pin	1	9N, 9NAN, 2N, 2NAN, 8N	39-48
	20672-S Bolt (pinion sleeve to center housing)-9/16"-12 x 1-1/4"	6	9N, 9NAN, 2N, 2NAN, 8N	39-48
	34810-S Lockwasher-9/16"	6	9N, 9NAN, 2N, 2NAN, 8N	39-48
BB 4616-B	Cup (driving pinion bearing)	2	9N, 9NAN, 2N, 2NAN, 8N	39-48
BB 4621-B	Cone and roller assy (driving pinion bearing)	2	9N, 9NAN, 2N, 2NAN, 8N	39-48
BB 4625-B	Bearing assy (driving pinion pilot)	1	9N, 9NAN, 2N, 2NAN, 8N	39-48
BB 4626-D	Race (driving pinion pilot bearing)	1	9N, 9NAN, 2N, 2NAN, 8N	39-48
BB 4627	Ring (driving pinion pilot bearing lock)	1	9N, 9NAN, 2N, 2NAN, 8N	39-48
B 4634	Nut (driving pinion lock)-1 9/16"-20 x 3/8" thick	2	9N, 9NAN, 2N, 2NAN, 8N	39-48
B 4636-A	Lockwasher (driving pinion bearing locknut)	1	9N, 9NAN, 2N, 2NAN, 8N	39-48
9N 4662	Gasket (differential center to transmission housing)	1	9N, 9NAN, 2N, 2NAN, 8N	39-48
BB 4667	Washer (driving pinion bearing thrust)	1	9N, 9NAN, 2N, 2NAN, 8N	39-48
BB 4668-B	Sleeve (driving pinion bearing)	1	9N, 9NAN, 2N, 2NAN, 8N	39-48
8N 5162	Clamp and cover assy (battery)		Refer to Battery Group	
9N 5182	Drawbar		Refer to Hydraulic Lift Group	

Ford

TRACTOR PARTS CATALOGUE

PART NUMBER	PART NAME	NO. REQ'D	MODEL	YEAR 19

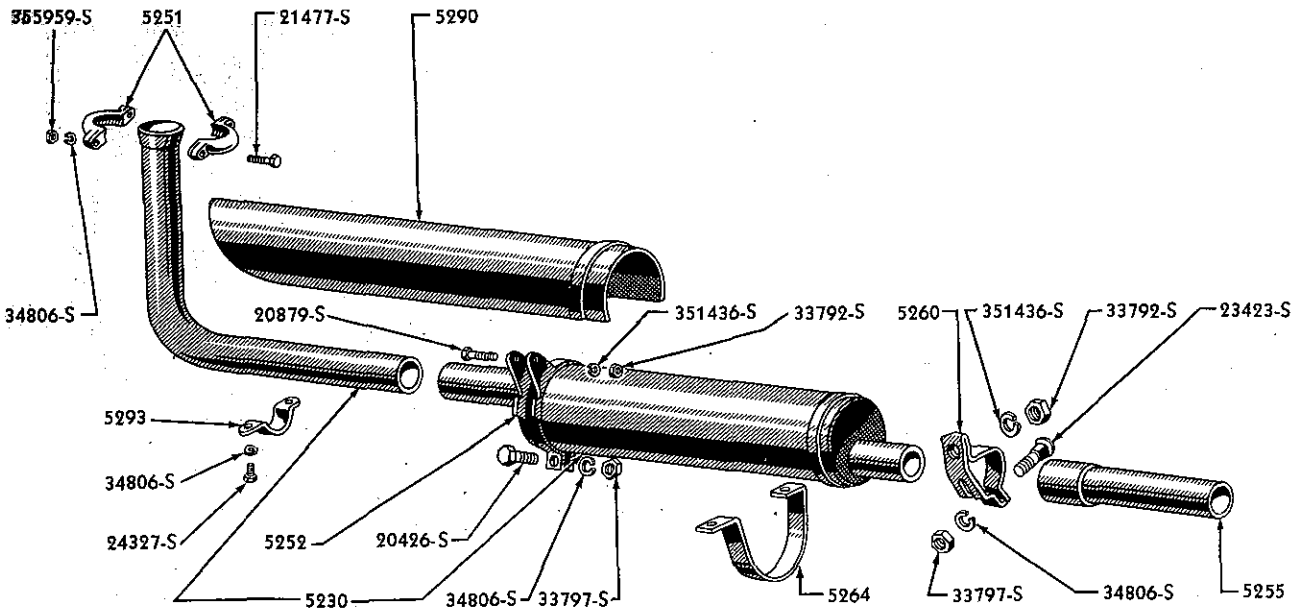

TP-44

1939-48 MUFFLER ASS'Y. AND RELATED PARTS

Basic numbers only shown on illustration. Order by Part Numbers shown in list of parts.

PART NUMBER	PART NAME		NO. REQ'D	MODEL	YEAR 19___
	Muffler				
9N 5230-A	Muffler assy		1	9N, 2N, 8N	39-48
9NAN 5230	Muffler assy		1	9NAN, 2NAN	39-48
9N 5251	Clamp (muffler inlet pipe)		2	9N, 9NAN, 2N, 2NAN, 8N	39-48
	21477-S7	Bolt (inlet pipe to clamp)-5/16"-18 x 1 5/8"	2	9N, 9NAN, 2N, 2NAN, 8N	39-48
	34806-S7	Lockwasher-5/16"	2	9N, 9NAN, 2N, 2NAN, 8N	39-48
	355959-S	Nut-5/16"-18	2	9N, 9NAN, 2N, 2NAN, 8N	39-48
9N 5252	Bracket and clamp assy (muffler)-special equipment		1	9N, 9NAN, 2N, 2NAN	39-47
	20426-S7	Bolt (bracket and clamp assy to muffler)-5/16"-18 x 1-5/8"	1	9N, 9NAN, 2N, 2NAN	39-47
	34806-S7	Lockwasher-5/16"	1	9N, 9NAN, 2N, 2NAN	39-47
	33797-S7	Nut-5/16"-18	1	9N, 9NAN, 2N, 2NAN	39-47
	20879-S7	Bolt (bracket and clamp assy to transmission and center housing)-7/16"-20 x 1-3/4"	1	9N, 9NAN, 2N, 2NAN	39-47
	351436-S	Lockwasher-7/16"	1	9N, 9NAN, 2N, 2NAN	39-47
	33787-S7	Nut-7/16"-20	1	9N, 9NAN, 2N, 2NAN	39-47

PART NUMBER	PART NAME	NO. REQ'D	MODEL	YEARS 1939-
9N 5255	Pipe (muffler outlet)	1	9N, 9NAN, 2N, 2NAN, 8N	39-48
9N 5260	Bracket (muffler outlet pipe)	1	9N, 9NAN, 2N, 2NAN, 8N	39-48
	23423-S7 Bolt (outlet pipe to muffler)-5/16"-18 x 1 1/8"-round head carriage	1	9N, 9NAN, 2N, 2NAN, 8N	39-48
	34806-S7 Lockwasher-5/16"	1	9N, 9NAN, 2N, 2NAN, 8N	39-48
	33797-S7 Nut-5/16"-18	1	9N, 9NAN, 2N, 2NAN, 8N	39-48
	33792-S7 Nut (outlet pipe clamp to rear axle stud)-7/16"-20	1	9N, 9NAN, 2N, 2NAN, 8N	39-48
	351436-S Lockwasher-7/16"	1	9N, 9NAN, 2N, 2NAN, 8N	39-48
8N 5264	Clamp (muffler)	1	8N	48
9N 5290	Shield assy (muffler)-special equipment	1	9N, 9NAN, 2N, 2NAN	39-47
9N 5293	Clamp (muffler shield)-front-special equipment	1	9N, 9NAN, 2N, 2NAN	39-47
	24327-S7 Bolt (clamp to muffler shield)-5/16"-24 x 5/8"	2	9N, 9NAN, 2N, 2NAN	39-47
	34806-S7 Lockwasher-5/16"	2	9N, 9NAN, 2N, 2NAN	39-47
M 5318	Cement (felt to steel)-used with 9N-2252 (brake dust seal ring)		Refer to Paints Group	

Drawbar Stays

9N 5370	Chain and wedge assy (drawbar)	1	9N, 9NAN, 2N, 2NAN, 8N	39-48
9N 5374	Stay (drawbar)-upper	2	9N, 9NAN, 2N, 2NAN, 8N	39-48
9N 5375	Stay (drawbar)-lower	2	9N, 9NAN, 2N, 2NAN, 8N	39-48
	20873-S7 Bolt (upper to lower stay)-7/16"-20 x 1.06"	4	9N, 9NAN, 2N, 2NAN, 8N	39-48
	351428-S7 Washer (stay bolt)-7/16"	4	9N, 9NAN, 2N, 2NAN, 8N	39-48
	33792-S7 Nut (upper to lower stay bolt)-7/16"-20	4	9N, 9NAN, 2N, 2NAN, 8N	39-48

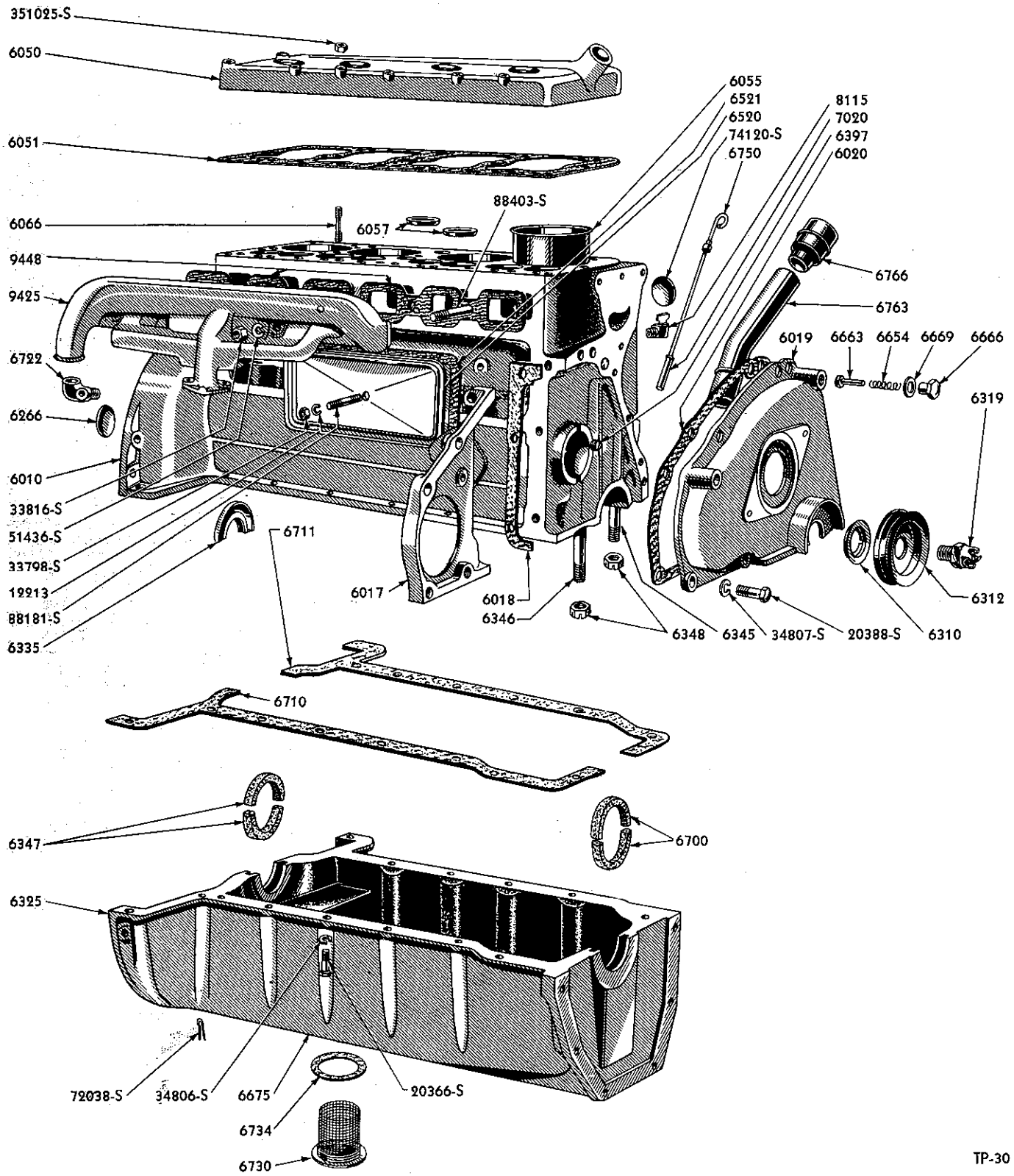

TP-30

1939-48 ENGINE ASS'Y. OUTSIDE

Basic numbers only shown on illustration. Order by Part Numbers shown in list of parts.

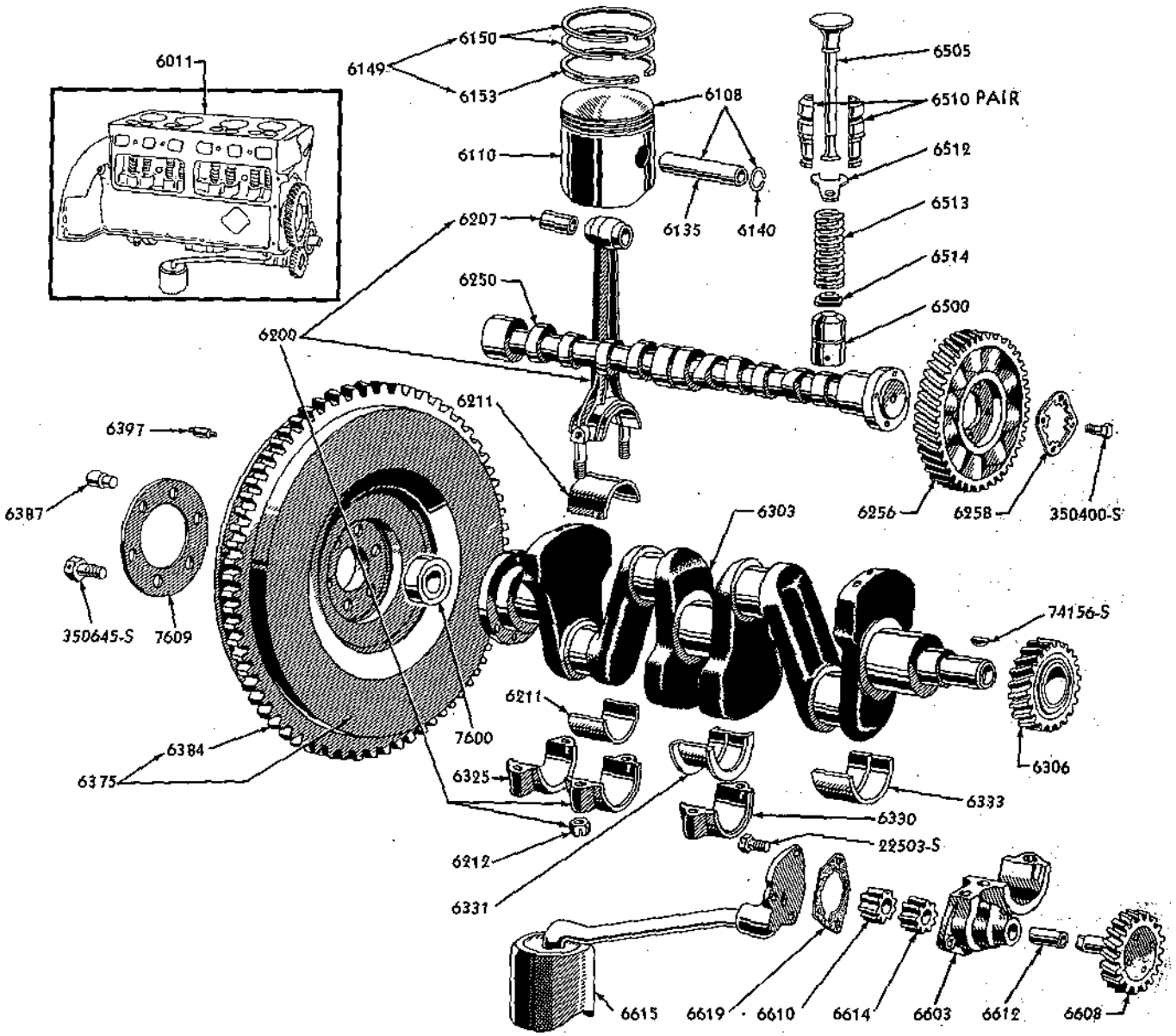

TP-31

1939-48 ENGINE ASS'Y. INSIDE

Basic numbers only shown on *illustration*. Order by Part Numbers shown in list of parts.

Ford

TRACTOR PARTS CATALOGUE

Engine

PART NUMBER	PART NAME	NO. REQ'D	MODEL	YEAR 19___
9N 6010	Block assy (cylinder)-with sleeves and bearing caps	1	9N, 9NAN, 2N, 2NAN, 8N	39-48
9N 6011	Cylinder assy-with bearings, pistons, valves, shafts and gears	1	9N, 9NAN, 2N, 2NAN, 8N	39-48
	74120-S Plug (cylinder block)-expansion 1 3/16"	4	9N, 9NAN, 2N, 2NAN, 8N	39-48
9N 6017	Cover (cylinder timing gear side)	1	9N, 9NAN, 2N, 2NAN, 8N	39-48
	20388-S7 Bolt (cylinder front cover to cylinder side cover)-3/8"-16 x 1"-hex head	3	9N, 9NAN, 2N, 2NAN, 8N	39-48
	34807-S7 Lockwasher (cylinder front cover to cylinder side cover)-3/8"	3	9N, 9NAN, 2N, 2NAN, 8N	39-48
9N 6018	Gasket (cylinder timing gear side cover)	1	9N, 9NAN, 2N, 2NAN, 8N	39-48
9N 6019-B	Cover (cylinder front)	1	9N, 9NAN, 2N, 2NAN, 8N	39-48
	20388-S7 Bolt (cylinder front cover to engine)-3/8"-16 x 1"-hex	5	9N, 9NAN, 2N, 2NAN, 8N	39-48
	20418-S7 Bolt (cylinder front cover to engine)-3/8"-16 x 1 3/8"-hex	1	9N, 9NAN, 2N, 2NAN, 8N	39-48
	34807-S7 Lockwasher (cylinder front cover to engine)-3/8"	6	9N, 9NAN, 2N, 2NAN, 8N	39-48
9N 6020-A	Gasket (cylinder front cover to cylinder)-.009"/.011"-optional with 9N-6020-B	1	9N, 9NAN, 2N, 2NAN, 8N	39-48
9N 6020-B	Gasket (cylinder front cover to cylinder)-.006"/.008"-optional with 9N-6020-A	1	9N, 9NAN, 2N, 2NAN, 8N	39-48
9N 6022	Gasket (governor to timing gear cover)	1	9N, 9NAN, 2N, 2NAN, 8N	39-48
	353052-S5 Plug (oil line pipe)-front	1	9N, 9NAN, 2N, 2NAN	39-47
9N 6050-B	Head (cylinder)	1	9N, 2N, 8N	39-48
9NAN 6050	Head (cylinder)	1	9NAN, 2NAN	39-48
9N 6051	Gasket (cylinder block to head)	1	9N, 9NAN, 2N, 2NAN, 8N	39-48
99A 6055	Sleeve (cylinder)-.040"wall thickness	4	9N, 9NAN, 2N, 2NAN, 8N	39-48
40 6057-B	Insert (intake valve seat)	4	9N, 9NAN, 2N, 2NAN, 8N	39-48
52 6057-B	Insert (exhaust valve seat)-tractors 86271 to 168259 produced without this insert	4	9N, 9NAN, 2N, 2NAN, 8N	39-48
18 6066	Stud (cylinder head)-7/16"-14 & 7/16"-20 x 2.78"	15	9N, 9NAN, 2N, 2NAN, 8N	39-48
40 6066	Stud (cylinder head)-7/16"-20 & 7/16"-14 x 2.90"	3	9N, 9NAN, 2N, 2NAN, 8N	39-48
	351025-S7 Nut (cylinder head to studs)-7/16"-20	18	9N, 9NAN, 2N, 2NAN	39-47

Ford

TRACTOR PARTS CATALOGUE

PART NUMBER	PART NAME	NO. REQ'D	MODEL	YEAR 19
2N 6108	Piston, pin and retainers-Consists of the following 1-2N 6110-A Piston 1-99A 6135-A Piston Pin 2-78 6140 Piston Pin Retainer	4	9N, 9NAN, 2N, 2NAN, 8N	39-48
2N 6110-A	Piston	4	9N, 9NAN, 2N, 2NAN, 8N	39-48
99A 6135-A	Pin (piston)-standard	4	9N, 9NAN, 2N, 2NAN, 8N	39-48
99A 6135-D	Pin (piston)-.001"O/S	4	9N, 9NAN, 2N, 2NAN, 8N	39-48
78 6140	Retainer (piston pin)	8	9N, 9NAN, 2N, 2NAN, 8N	39-48
9N 6149-A	Ring set (piston)	1	9N, 9NAN, 2N, 2NAN, 8N	39-48
99A 6150-A	Ring (piston compression)	8	9N, 9NAN, 2N, 2NAN, 8N	39-48
99A 6153-A	Ring (piston oil control)	4	9N, 9NAN, 2N, 2NAN, 8N	39-48
9N 6200-B	Rod assy (connecting)	4	9N, 9NAN, 2N, 2NAN, 8N	39-48
21A 6207-A	Bushing (connecting rod)-.735" I.D.-1.36" long	4	9N, 9NAN, 2N, 2NAN, 8N	39-48
21A 6207-B	Bushing (connecting rod)-.729" I.D.-1.36" long	4	9N, 9NAN, 2N, 2NAN, 8N	39-48
9N 6211-A	Liner (connecting rod bearing)-standard	8	9N, 9NAN, 2N, 2NAN, 8N	39-48
9N 6211-B	Liner (connecting rod bearing)-.001"U/S	8	9N, 9NAN, 2N, 2NAN, 8N	39-48
9N 6211-C	Liner (connecting rod bearing)-.002"U/S	8	9N, 9NAN, 2N, 2NAN, 8N	39-48
9N 6211-D	Liner (connecting rod bearing)-.005" U/S	8	9N, 9NAN, 2N, 2NAN, 8N	39-48
9N 6211-E	Liner (connecting rod bearing)-.010" U/S	8	9N, 9NAN, 2N, 2NAN, 8N	39-48
9N 6211-F	Liner (connecting rod bearing)-.012" U/S	8	9N, 9NAN, 2N, 2NAN, 8N	39-48
9N 6211-G	Liner (connecting rod bearing)-.020" U/S	8	9N, 9NAN, 2N, 2NAN, 8N	39-48
9N 6211-H	Liner (connecting rod bearing)-.007" U/S	8	9N, 9NAN, 2N, 2NAN, 8N	39-48
1GA 6212	Nut (connecting rod)-self locking	8	9N, 9NAN, 2N, 2NAN, 8N	39-48
9N 6250-A	Camshaft (not serviced)-replaced by 1-9N 6250-B, 1-91A 6256-A, 1-91A 6258, 4- 350400-S	1	9N, 9NAN	39-42
9N 6250-B	Camshaft	1	9N, 9NAN, 2N, 2NAN, 8N	39-48
48 6256	Gear (camshaft)-use only with 9N-6250-A	1	9N, 9NAN	39-42
91A 6256-A	Gear (camshaft)-aluminum-standard	1	2N, 2NAN, 8N	41-48
91A 6256-B	Gear (camshaft)-aluminum-.006"O/S	1	2N, 2NAN, 8N	41-48
91A 6258	Ring (camshaft gear locking)	1	9N, 9NAN, 2N, 2NAN, 8N	39-48
	350400-S Bolt (camshaft to gear)-5/16"-24 x .610"	4	9N, 9NAN, 2N, 2NAN, 8N	39-48
91A 6266	Seal (camshaft rear bearing)	1	9N, 9NAN, 2N, 2NAN, 8N	39-48
2N 6285	Shim (camshaft gear)	as reqd	2N, 2NAN	42-47
9N 6303-A	Crankshaft-standard	1	9N, 9NAN, 2N, 2NAN, 8N	39-48
9N 6303-B	Crankshaft-.002"U/S	1	9N, 9NAN, 2N, 2NAN, 8N	39-48
9N 6303-C	Crankshaft-.005"U/S	1	9N, 9NAN, 2N, 2NAN, 8N	39-48
9N 6303-D	Crankshaft-.010"U/S	1	9N, 9NAN, 2N, 2NAN, 8N	39-48
48 6306	Gear (crankshaft)	1	9N, 9NAN, 2N, 2NAN, 8N	39-48
	74156-S Key (gear to crankshaft)-Woodruff	1	9N, 9NAN, 2N, 2NAN, 8N	39-48
40 6310-A	Slinger (crankshaft oil)	1	9N, 9NAN, 2N, 2NAN, 8N	39-48
2N 6312	Pulley assy (crankshaft)	1	9N, 9NAN, 2N, 2NAN, 8N	39-48
2N 6319-A	Ratchet (crankshaft)	1	9N, 9NAN, 2N, 2NAN, 8N	39-48
9N 6325	Cap (crankshaft rear bearing)	1	9N, 9NAN, 2N, 2NAN, 8N	39-48

Ford

TRACTOR PARTS CATALOGUE

PART NUMBER	PART NAME	NO. REQ'D	MODEL	YEAR 19__
9N 6330	Cap (crankshaft center bearing)	1	9N, 9NAN, 2N, 2NAN, 8N	39-48
9N 6331-A	Liner (center main bearing)-standard	2	9N, 9NAN, 2N, 2NAN, 8N	39-48
9N 6331-B	Liner (center main bearing)-.001" U/S	2	9N, 9NAN, 2N, 2NAN, 8N	39-48
9N 6331-C	Liner (center main bearing)-.002" U/S	2	9N, 9NAN, 2N, 2NAN, 8N	39-48
9N 6331-D	Liner (center main bearing)-.005" U/S	2	9N, 9NAN, 2N, 2NAN, 8N	39-48
9N 6331-E	Liner (center main bearing)-.010" U/S	2	9N, 9NAN, 2N, 2NAN, 8N	39-48
9N 6331-F	Liner (center main bearing)-.012" U/S	2	9N, 9NAN, 2N, 2NAN, 8N	39-48
9N 6331-G	Liner (center main bearing)-.020" U/S	2	9N, 9NAN, 2N, 2NAN, 8N	39-48
9N 6331-H	Liner (center main bearing)-.007" U/S	2	9N, 9NAN, 2N, 2NAN, 8N	39-48
9N 6333-A	Liner (front and rear main bearing)-standard	4	9N, 9NAN, 2N, 2NAN, 8N	39-48
9N 6333-B	Liner (front and rear main bearing)-.001" U/S	4	9N, 9NAN, 2N, 2NAN, 8N	39-48
9N 6333-C	Liner (front and rear main bearing)-.002" U/S	4	9N, 9NAN, 2N, 2NAN, 8N	39-48
9N 6333-D	Liner (front and rear main bearing)-.005" U/S	4	9N, 9NAN, 2N, 2NAN, 8N	39-48
9N 6333-E	Liner (front and rear main bearing)-.010" U/S	4	9N, 9NAN, 2N, 2NAN, 8N	39-48
9N 6333-F	Liner (front and rear main bearing)-.012" U/S	4	9N, 9NAN, 2N, 2NAN, 8N	39-48
9N 6333-G	Liner (front and rear main bearing)-.020" U/S	4	9N, 9NAN, 2N, 2NAN, 8N	39-48
9N 6333-H	Liner (front and rear main bearing)-.007" U/S	4	9N, 9NAN, 2N, 2NAN, 8N	39-48
91A 6335	Seal (crankshaft rear bearing oil)	1	9N, 9NAN, 2N, 2NAN, 8N	39-48
9N 6345	Stud (bearing cap)-1/2"-13 & 1/2"-20 x 2.84" drilled	5	9N, 9NAN, 2N, 2NAN, 8N	39-48
9N 6346	Stud (bearing cap)-1/2"-13 & 1/2"-20 x 3.84" drilled	1	9N, 9NAN, 2N, 2NAN, 8N	39-48
91A 6347	Packing (cylinder block)-rear	2	9N, 9NAN, 2N, 2NAN, 8N	39-48
B 6348	Nut (bearing cap studs)-1/2"-20	6	9N, 9NAN, 2N, 2NAN, 8N	39-48
9N 6375	Flywheel assy	1	9N, 9NAN, 2N, 2NAN, 8N	39-48
	350645-S Bolt (flywheel to crankshaft)-7/16"-20 x .84" hex head	4	9N, 9NAN, 2N, 2NAN, 8N	39-48
9N 6384	Gear (flywheel starting)	1	9N, 9NAN, 2N, 2NAN, 8N	39-48
B 6387-A	Dowel (flywheel to crankshaft)-.66" x .4375"	2	8N	48
B 6387-B	Dowel (flywheel to crankshaft)-.66" x .4395" O/S	2	9N, 9NAN, 2N, 2NAN	39-47
18 6397	Dowel (cylinder block to front cover)	2	9N, 9NAN, 2N, 2NAN, 8N	39-48
18 6397	Dowel (cylinder block to transmission)	2	9N, 9NAN, 2N, 2NAN, 8N	39-47
91A 6500-A	Rod (valve push)	8	9N, 9NAN, 2N, 2NAN, 8N	39-48
40 6505-A	Valve (intake)	4	9N, 9NAN, 2N, 2NAN, 8N	39-48
9N 6505-A	Valve (exhaust)	4	9N, 9NAN, 2N, 2NAN, 8N	39-48
40 6510-B	Bushing (valve guide)-serviced in pairs only	8Prs	9N, 9NAN, 2N, 2NAN, 8N	39-48
40 6512	Retainer (valve guide housing)	8	9N, 9NAN, 2N, 2NAN, 8N	39-48
2NC 6513	Spring (valve)	8	9N, 9NAN, 2N, 2NAN, 8N	39-48
40 6514-B	Retainer (valve spring)	8	9N, 9NAN, 2N, 2NAN, 8N	39-48

PART NUMBER	PART NAME	NO. REQ'D	MODEL	YEAR
2N 6520	Cover (valve chamber)	2	2N, 2NAN, 8N, 8NAN after Serial 99,999	48-48
	88181-S Stud (valve chamber cover) - 5/16"-18 & 5/16"-24 x 3 1/4"	2	2N, 2NAN beginning Serial 100,000	42-47
	88146-S Stud (valve chamber cover) - 5/16"-18 & 5/16"-24 x 2 13/16"	2	9N, 9NAN to Serial 99,999	39-43
	88531-S Stud (valve chamber cover) - 5/16"-18 & 5/16"-24 x 3 1/4"	2	8N	48
	B-12213 Washer (valve chamber cover)	2	9N, 9NAN, 2N, 2NAN	39-47
	351242-S7 Washer (valve chamber cover)	2	8N	48
	33798-S7 Nut (valve chamber cover)	2	9N, 9NAN, 2N, 2NAN, 8N	39-48
9N 6521	Gasket (valve chamber cover)	2	9N, 9NAN, 2N, 2NAN, 8N	39-48
9N 6603	Body assy (oil pump)	1	9N, 9NAN, 2N, 2NAN, 8N	39-48
9N 6608	Gear and shaft assy (oil pump drive)	1	9N, 9NAN, 2N, 2NAN, 8N	39-48
52 6610-B	Gear (oil pump driven)	1	9N, 9NAN, 2N, 2NAN, 8N	39-48
9N 6612-A	Bushing (oil pump body)	1	9N, 9NAN, 2N, 2NAN, 8N	39-48
52 6614-B	Gear (oil pump drive)	1	9N, 9NAN, 2N, 2NAN, 8N	39-48
9N 6615	Tube and screen cover assy (oil inlet)	1	9N, 9NAN, 2N, 2NAN, 8N	39-48
9N 6619	Gasket (oil pump cover)	1	9N, 9NAN, 2N, 2NAN, 8N	39-48
	22503-S Bolt (oil pump cover) -hex	3	9N, 9NAN, 2N, 2NAN, 8N	39-48
9N 6654	Spring (oil relief valve)	1	9N, 9NAN, 2N, 2NAN, 8N	39-48
01A 6663	Plunger (oil relief valve)	1	9N, 9NAN, 2N, 2NAN, 8N	39-48
68 6666	Nut (oil relief valve)	1	9N, 9NAN, 2N, 2NAN, 8N	39-48
1GA 6669	Gasket (oil relief valve nut)	1	9N, 9NAN, 2N, 2NAN, 8N	39-48
9N 6675	Pan assy (engine oil)	1	9N, 9NAN, 2N, 2NAN, 8N	39-48
	350803-S7 Bolt and lockwasher assy (oil pan to cylinder block)	16	9N, 9NAN, 2N, 2NAN, 8N	39-48
	20366-S7 Bolt (oil pan to cylinder block) -5/16"-18 x 7/8"	16	9N, 9NAN, 2N, 2NAN, 8N	39-48
	34806-S7 Lockwasher (oil pan to cylinder block) -5/16"	16	9N, 9NAN, 2N, 2NAN, 8N	39-48
	72038-S7 Cotter pin (oil pan)	1	9N, 9NAN, 2N, 2NAN, 8N	39-48
B 6700-A	Packing (oil pan and cylinder cover) -front	2	9N, 9NAN, 2N, 2NAN, 8N	39-48
9N 6710	Gasket (oil pan) -RH	1	9N, 9NAN, 2N, 2NAN, 8N	39-48
9N 6711	Gasket (oil pan) -LH	1	9N, 9NAN, 2N, 2NAN, 8N	39-48
8N 6722	Elbow (oil filter and oil gauge to block)	1	8N	48
9N 6730	Plug and screen assy (oil pan drain)	1	9N, 9NAN, 2N, 2NAN, 8N	39-48
91A 6734	Gasket (oil pan drain plug)	1	9N, 9NAN, 2N, 2NAN, 8N	39-48
9N 6750-A	Indicator (oil level)	1	9N, 9NAN, 2N, 2NAN, 8N	39-48
9N 6763	Pipe assy (oil filler)	1	9N, 9NAN, 2N, 2NAN, 8N	39-48
9N 6766	Cap assy (oil filler)	1	9N, 9NAN, 2N, 2NAN, 8N	39-48

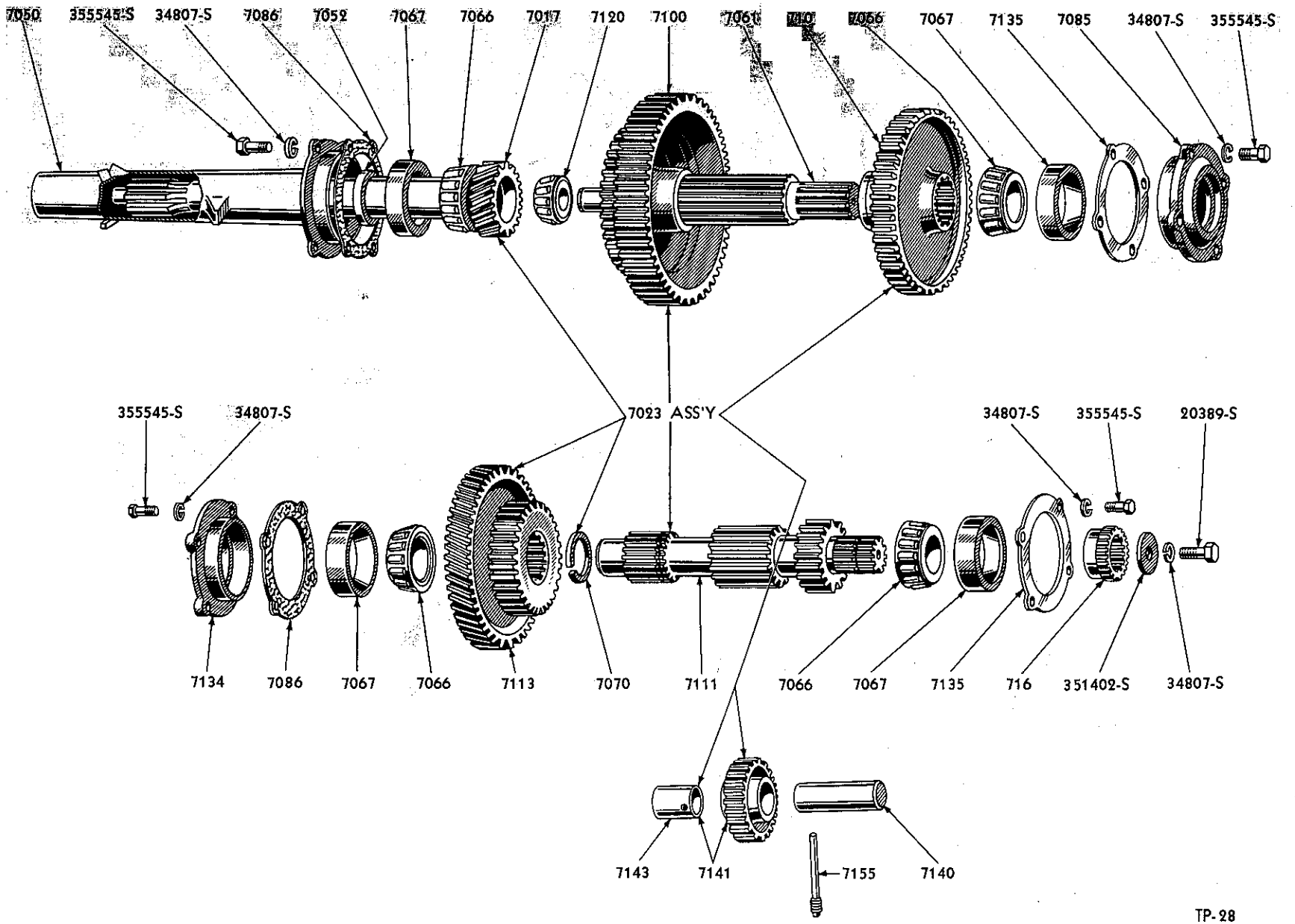

1939-47 3-SPEED TRANSMISSION

Basic numbers only shown on illustration. Order by Part Numbers shown in list of parts.

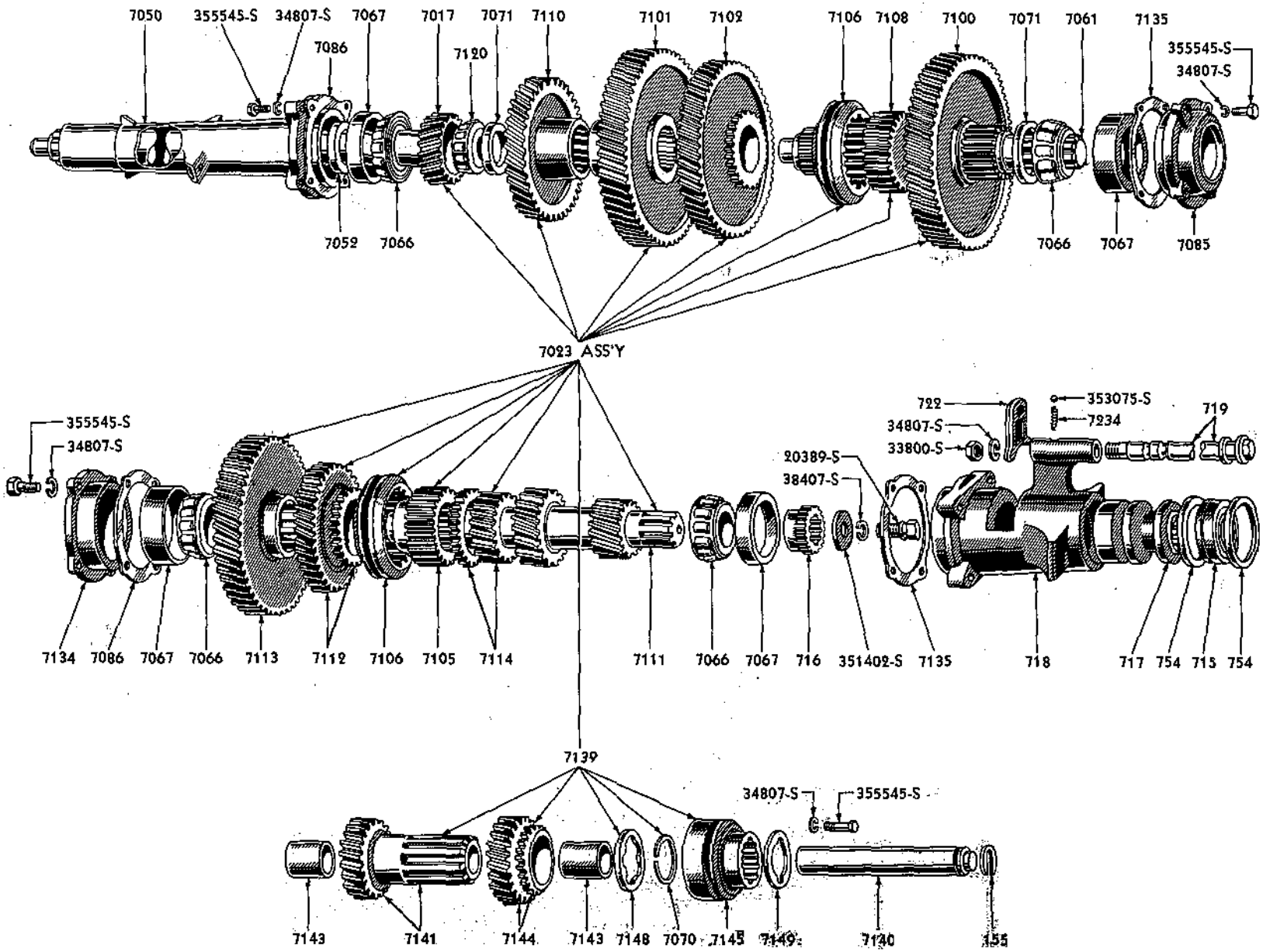

1948 4-SPEED TRANSMISSION

Basic numbers only shown on illustration. Order by Part Number [illegible] parts.

Transmission

PART NUMBER	PART NAME	NO. REQ'D	MODEL	YEAR 19—
9N 7000	Transmission assy	1	9N, 2N	39-47
9NAN 7000	Transmission assy (kerosene conversion)	1	9NAN, 2NAN	39-47
8N 7001	Transmission assy-less gear shift housing assy	1	8N	48
9N 7005-B	Case assy (transmission)-with one top cover hole	1	9N, 9NAN, 2N, 2NAN	39-47
8N 7005	Case assy (transmission)-with 2 top cover holes	1	8N	48
	355545-S Bolt (power take-off bearing retainer to transmission case)-3/8"-16 x 1 1/4"	4	9N, 9NAN, 2N, 2NAN, 8N	39-48
	34807-S Lockwasher-3/8"	4	9N, 9NAN, 2N, 2NAN, 8N	39-48
	21441-S7 Bolt (transmission housing to engine)-7/16"-14 x 1.25"	9	9N, 9NAN, 2N, 2NAN, 8N	39-48
	20880-S7 Bolt (transmission housing to center housing)-7/16"-20 x 1.38"	9	9N, 9NAN, 2N, 2NAN, 8N	39-48
	33792-S7 Nut (transmission housing to center housing)-hex-7/16"-20	9	9N, 9NAN, 2N, 2NAN, 8N	39-48
2N 7010	Plug (transmission drain)-2.50" O.D.	2	9N, 9NAN, 2N, 2NAN, 8N	39-48
	72038-S7 Cotter pin (transmission drain) -7/32" x 1"	1	9N, 9NAN, 2N, 2NAN, 8N	39-48
9N 7011	Gasket (transmission drain plug)	1	9N, 9NAN, 2N, 2NAN	39-47
9N 7011	Gasket (transmission drain plug)	2	8N	48
✚2N 7017-A	Gear (main drive)-standard ratio-optional with 2NAN-7017	1	9N, 9NAN, 2N, 2NAN, 8N	39-48
✚2NAN 7017	Gear (main drive)-low ratio-optional with 2N-7017-A	1	9NAN, 2NAN	39-47
9N 7020	Tube (transmission oil level short)-indicator	1	9N, 9NAN, 2N, 2NAN, 8N	39-48
2N 7023	Gear set (transmission)-matched-Consists of the following 1-2N 7017-A Gear; 1-9N 7111 Countershaft 1-9N 7100 Gear; 1-9N 7070 Ring 1-9N 7101 Gear; 1-2N 7113-A Gear 1-9N 7141 Gear & Bushing assy	1	2N	45-47
2NAN 7023	Gear set (transmission)-matched-Consists of the following 1-2NAN 7017 Gear; 1-2NAN 7017-A Gear 1-2NAN 7013 Gear; 1- 2N 7113-A Gear 1- 9N 7100 Gear; 1- 9N 7101 Gear 1- 9N 7141 Gear; 1- 9N 7111 C'Shaft 1-9N 7070 Ring	1	9NAN, 2NAN	39-47
8N 7023	Gear set (transmission)-matched-Consists of the following 1-2N 7017-A Gear; 1-8N 7100 Gear 1-8N 7101 Gear; 1-8N 7102 Gear 1-8N 7105 Connector; 2-8N 7106 Coupling 1-8N 7108 Connector; 1-8N 7110 Gear 1-8N 7111 C'Shaft; 1-8N 7112 Gear 1-8N 7113 Gear; 1-8N 7114 Gear 1-8N 7139 Gear Assy	1	8N	48
8N 7037	Gasket (transmission cover filler cap)	1	8N	48
9N 7050	Retainer (main drive gear bearing)	1	9N, 9NAN, 2N, 2NAN, 8N	39-48
	355545-S Bolt (main drive gear bearing retainer to trans. case)	4	9N, 9NAN, 2N, 2NAN, 8N	39-48
	34807-S Lockwasher	4	9N, 9NAN, 2N, 2NAN, 8N	39-48
78 7052	Oil seal (main drive gear bearing)	1	9N, 9NAN, 2N, 2NAN, 8N	39-48
9N 7061	Shaft (transmission main)-11.62" long-10 external splines on one end	1	9N, 9NAN, 2N, 2NAN	39-47
8N 7061	Shaft (transmission main)-11.66" long-17 teeth on one end-19 teeth opposite end	1	8N	48

HX stamped on transmission case flange indicates tractors equipped with helical gears. Tractors not marked HX have spur gears, and for service should be replaced by items 2N-7017-A Gear & 2N-7113-A Gear, in pairs.

PART NUMBER	PART NAME	NO. REQ'D	MODEL	YEAR 19-
9N 7066	Cone and roller assy (main drive gear bearing)	1	9N, 9NAN, 2N, 2NAN, 8N	39-48
9N 7066	Cone and roller assy (main shaft bearing)	1	9N, 9NAN, 2N, 2NAN, 8N	39-48
9N 7066	Cone and roller assy (countershaft rear end bearing)	1	9N, 9NAN, 2N, 2NAN, 8N	39-48
9N 7066	Cone and roller assy (countershaft front end bearing)	1	9N, 9NAN, 2N, 2NAN, 8N	39-48
9N 7067	Cup (main drive gear bearing)	1	9N, 9NAN, 2N, 2NAN, 8N	39-48
9N 7067	Cup (main shaft bearing)	1	9N, 9NAN, 2N, 2NAN, 8N	39-48
9N 7067	Cup (countershaft rear end bearing)	1	9N, 9NAN, 2N, 2NAN, 8N	39-48
9N 7067	Cup (countershaft front end bearing)	1	9N, 9NAN, 2N, 2NAN, 8N	39-48
9N 7070	Snap ring (countershaft)	1	9N, 9NAN, 2N, 2NAN, 8N	39-48
8N 7071-A	Washer (main drive shaft thrust) -2.50"O.D.x1.77"I.D.	1	8N	48
8N 7071-B	Washer (main drive shaft thrust) -2.12"O.D.x1.32"I.D.	1	8N	48
9N 7085	Retainer (main shaft bearing)	1	9N, 9NAN, 2N, 2NAN, 8N	39-48
	355545-S Bolt (main shaft bearing retainer to trans. case)	4	9N, 9NAN, 2N, 2NAN, 8N	39-48
	34807-S Lockwasher	4	9N, 9NAN, 2N, 2NAN, 8N	39-48
9N 7086	Gasket (main shaft bearing retainer)	2	9N, 9NAN, 2N, 2NAN, 8N	39-48
9N 7100	Gear (transmission sliding)-first and third-43 teeth	1	9N, 9NAN, 2N, 2NAN	39-47
8N 7100	Gear (transmission sliding)-first-60 teeth	1	8N	48
9N 7101	Gear (trans. sliding)-2nd & reverse-56 teeth-7.23"O.D.	1	9N, 9NAN, 2N, 2NAN	39-47
8N 7101	Gear (trans. sliding)-second-56 teeth-7.314" O.D.	1	8N	48
8N 7102	Gear (transmission sliding)-third	1	8N	48
8N 7105	Connector (transmission countershaft to coupling)	1	8N	48
8N 7106	Coupling (transmission gear shift sliding)	2	8N	48
8N 7108	Connector (transmission main shaft to coupling)	1	8N	48
8N 7110	Gear (transmission main shaft sliding)-fourth	1	8N	48
9N 7111	Countershaft (transmission)-11.87" long	1	9N, 9NAN, 2N, 2NAN	39-47
8N 7111	Countershaft (transmission)-12.06" long	1	8N	48
8N 7112	Gear (transmission countershaft)-fourth	1	8N	48
✚2N 7113-A	Gear (transmission countershaft)-standard ratio	1	9N, 2N	39-47
✚2NAN 7113	Gear (transmission countershaft)-low ratio	1	9NAN, 2NAN	39-47
8N 7113	Gear (transmission countershaft)-55 teeth-7.120"O.D.	1	8N	48
8N 7114	Gear (transmission countershaft)-second	1	8N	48
9N 7120	Bearing assy (main shaft pilot)	1	9N, 9NAN, 2N, 2NAN, 8N	39-48
9N 7134	Retainer (transmission countershaft bearing)	1	9N, 9NAN, 2N, 2NAN, 8N	39-48
	355545-S Bolt (countershaft bearing retainer to transmission case)	4	9N, 9NAN, 2N, 2NAN, 8N	39-48
	34807-S Lockwasher	4	9N, 9NAN, 2N, 2NAN, 8N	39-48
9N 7135-A	Shim (transmission bearing retainer)-.003"		9N, 9NAN, 2N, 2NAN, 8N	39-48
9N 7135-F	Shim (transmission bearing retainer)-.005"		9N, 9NAN, 2N, 2NAN, 8N	39-48
9N 7135-G	Shim (transmission bearing retainer)-.012"		9N, 9NAN, 2N, 2NAN, 8N	39-48
9N 7137-A	Indicator assy (transmission oil level)-12.60" long	1	9N, 9NAN before Serial 47,508	39-42
9N 7137-B	Indicator assy (transmission oil level)-8.25" long	1	2N, 2NAN after Serial 47,507, 8N	42-48
8N 7139	Gear assy (reverse idler)	1	8N	48
9N 7140	Shaft (reverse idler gear)-3.62" x 1.010"	1	9N, 9NAN, 2N, 2NAN	39-47
8N 7140	Shaft (reverse idler gear)-6.60" x 1.127"	1	8N	48
9N 7141	Gear and bushing assy (reverse idler)-24 teeth	1	9N, 9NAN, 2N, 2NAN	39-47
8N 7141	Gear and bushing assy (reverse idler)-23 teeth	1	8N	48
9N 7143-A	Bushing (reverse idler gear)-1.70" x 1.1185" O.D. x .986" I.D.-11/32" center punched	1	9N, 9NAN, 2N, 2NAN	39-47
8N 7143	Bushing (reverse idler gear)-1.1245" I.D.-1.2495" O.D.-RH spiral oil groove-split	2	8N	48
8N 7144	Gear (reverse idler)-driven	1	8N	48
8N 7145	Coupling (reverse gear)-transmission shift	1	8N	48
8N 7148	Washer (transmission reverse idler thrust)	1	8N	48
8N 7149	Washer (transmission reverse idler thrust)	1	8N	48
9N 7155	Pin (reverse idler gear shaft)	1	9N, 9NAN, 2N, 2NAN	39-47
8N 7155	Snap ring (reverse idler shaft)	1	8N	48
9N 7158-C	Cover assy (differential housing)		Refer to Rear Axle Group	

✚ HX stamped on transmission case flange indicates tractors equipped with helical gears. Tractors not marked HX have spur gears and for service should be replaced by items 2N-7017-A Gear & 2N-7113-A Gear, in pairs.

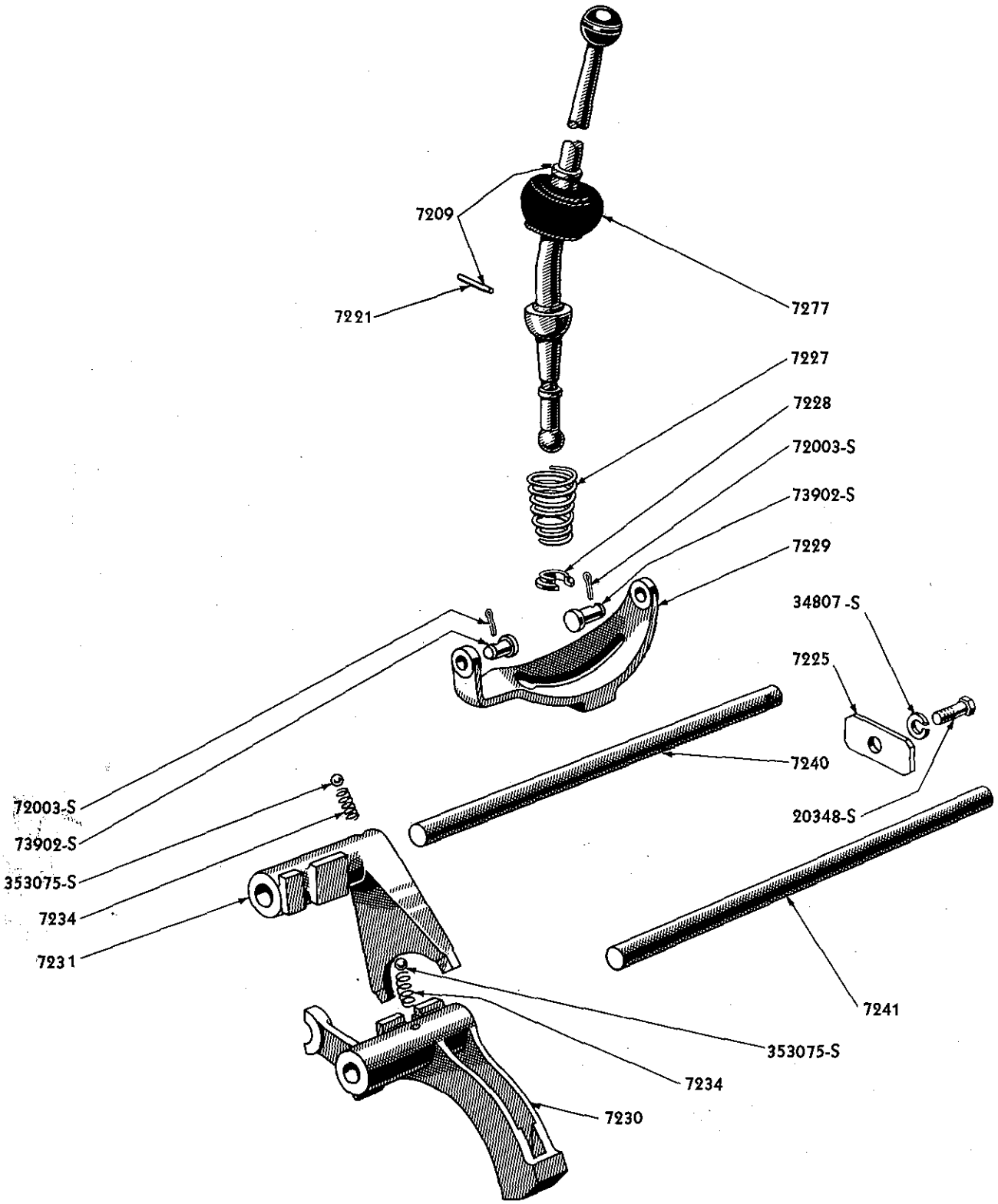

1939-47 GEAR SHIFT AND RELATED PARTS

Basic numbers only shown on illustration. Order by Part Numbers shown in list of parts.

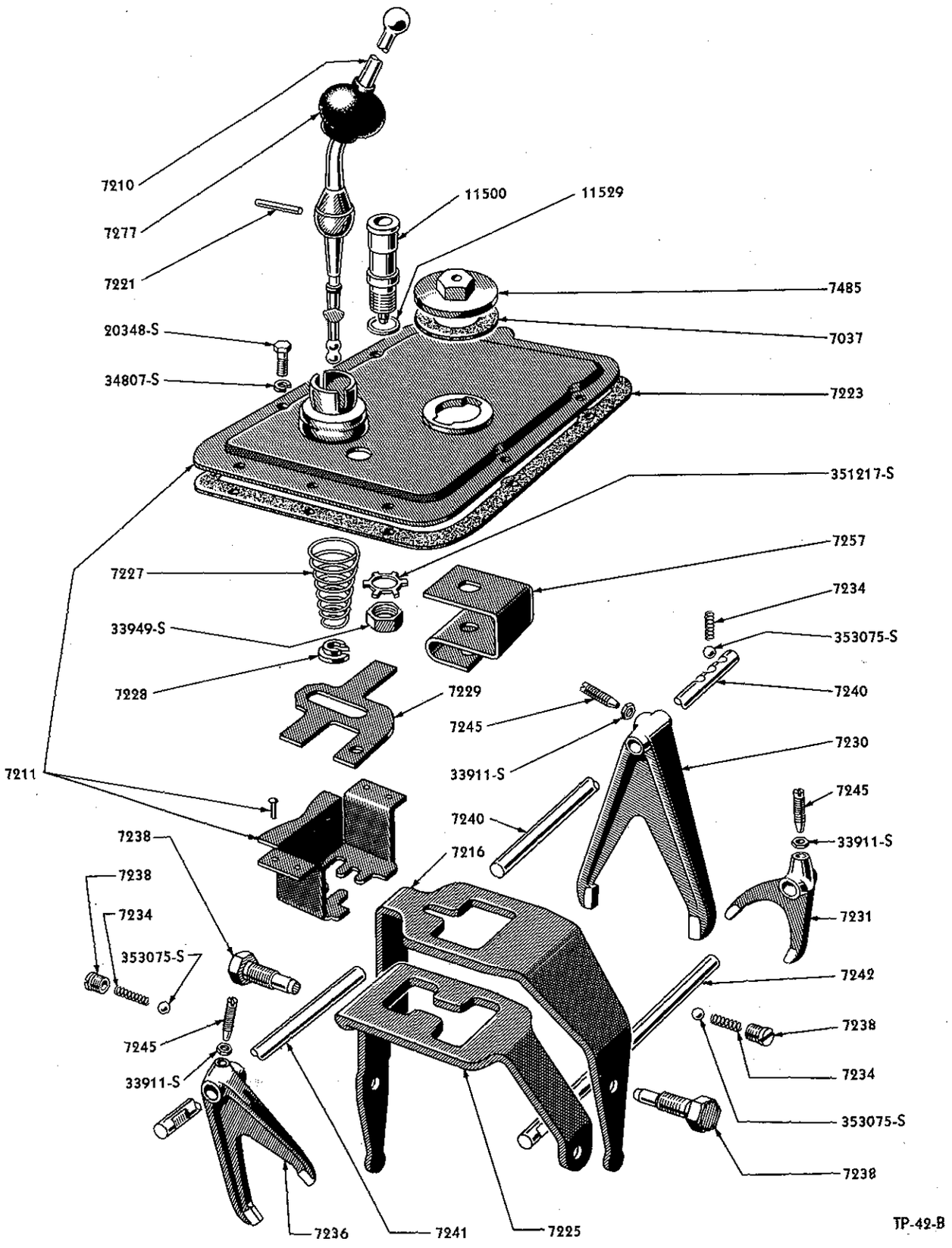

1948 GEAR SHIFT AND RELATED PARTS

Basic numbers only shown on illustration. Order by Part Numbers shown in list of parts.

Ford

TRACTOR PARTS CATALOGUE

PART NUMBER	PART NAME	NO. REQ'D	MODEL	YEAR 19___
9N 7209	Lever assy (gear shift)	1	9N, 9NAN, 2N, 2NAN	39-47
8N 7210	Lever (transmission gear shift)	1	8N	48
8N 7211	Cover assy (transmission)	1	8N	48
	20348-S7 Bolt (transmission cover to transmission housing)	10	8N	48
	34807-S Lockwasher (transmission cover to transmission housing bolt)	10	8N	48
8N 7216	Plate (transmission reverse gear shift)	1	8N	48
9N 7221	Pin (gear shift lever)	1	9N, 9NAN, 2N, 2NAN, 8N	39-48
9N 7223-A	Gasket (gear shift housing to transmission case)	1	9N, 9NAN before Serial 47,508	39-42
9N 7223-B	Gasket (gear shift housing to transmission case)-use with 9N-7005-B-case assy	1	9N, 9NAN, 2N, 2NAN after Serial 47,507	42-47
8N 7223	Gasket (gear shift housing to transmission case)	1	8N	48
9N 7225	Plate (gear shift fork rod)-1.876" x 1" with 13/32" hole	1	9N, 9NAN, 2N, 2NAN	39-47
8N 7225	Plate (transmission second and fourth gear shift)	1	8N	48
	20348-S Bolt (shift lever plate)-3/8"-16 x 3/4"	1	9N, 9NAN, 2N, 2NAN, 8N	39-48
	34807-S Lockwasher-3/8"	1	9N, 9NAN, 2N, 2NAN, 8N	39-48
9N 7227	Spring (gear shifter lever)	1	9N, 9NAN, 2N, 2NAN, 8N	39-48
9N 7228-A	Seat (gear shift lever spring)	1	9N, 9NAN, 2N, 2NAN, 8N	39-48
9N 7229-A	Lock (gear shifter)-use with 9N-3550-A steering gear	1	9N, 9NAN before Serial 12,500	39-42
9N 7229-B	Lock (gear shifter)-use with 9N-3550-C steering gear	1	9N, 9NAN, 2N, 2NAN after Serial 12,499	42-47
	73902-S Pin (gear lock to lower housing)-3/16" x 1"	2	9N, 9NAN, 2N, 2NAN	39-47
	72003-S Cotter pin	2	9N, 9NAN, 2N, 2NAN	39-47
8N 7229	Latch (starter safety)	1	8N	48
9N 7230-B	Fork (transmission first and third gears shifter)-3.96" x 4.38" x 60°	1	9N, 9NAN, 2N, 2NAN	39-47
8N 7230	Fork (transmission first and third gears shifter)	1	8N	48
9N 7231-B	Fork (transmission second and reverse gears shifter)	1	9N, 9NAN, 2N, 2NAN	39-47
8N 7231	Fork (transmission reverse gear shifter)-2.12" x 2.174" x 1.68"	1	8N	48
BB 7234	Spring (transmission shifter shaft mesh lock)	3	8N	48
79 7234	Spring (transmission shifter fork)	2	9N, 9NAN, 2N, 2NAN	39-47
79 7234	Spring (transmission shifter fork)	3	8N	48
	353075-S Ball (shifter fork spring)-steel-3/8"	2	9N, 9NAN, 2N, 2NAN, 8N	39-48
79 7234	Spring (power take-off shifter rail mesh)		Refer to Power Take-Off Group	
8N 7236	Fork (transmission second and fourth gears shifter)	1	8N	48
74 7238	Seat (transmission lock plunger spring)	2	8N	48
8N 7238	Pivot (transmission shifter plate)	2	8N	48
9N 7240	Rod (gear shift selector)-RH	1	9N, 9NAN, 2N, 2NAN	39-47
8N 7240	Rail (transmission first and third gears shifter)	1	8N	48
9N 7241	Rod (gear shift selector)-LH	1	9N, 9NAN, 2N, 2NAN	39-47
8N 7241	Rail (transmission second and fourth gears shifter)	1	8N	48
8N 7242	Rail (transmission reverse gear shifter)	1	8N	48
8N 7245	Screw (transmission gear shifter fork lock)	3	8N	48
	33911-S Nut (transmission gear shift fork lock screw to shifter fork)	3	8N	48
8N 7257	Support (starter safety latch)	1	8N	48
9N 7277	Seal (gear shift lever dust)-1.56" x 1.50"	1	9N, 9NAN, 2N, 2NAN	39-47
8N 7277	Seal (gear shift lever dust)-1.90" x .88"	1	8N	48
9N 7334	Rod (clutch release)	1	9N, 9NAN, 2N, 2NAN	39-47
8N 7485	Cap assy (transmission cover filler)	1	8N	48

Ford

TRACTOR PARTS CATALOGUE

PART NUMBER	PART NAME	NO. REQ'D	MODEL	YEAR 19

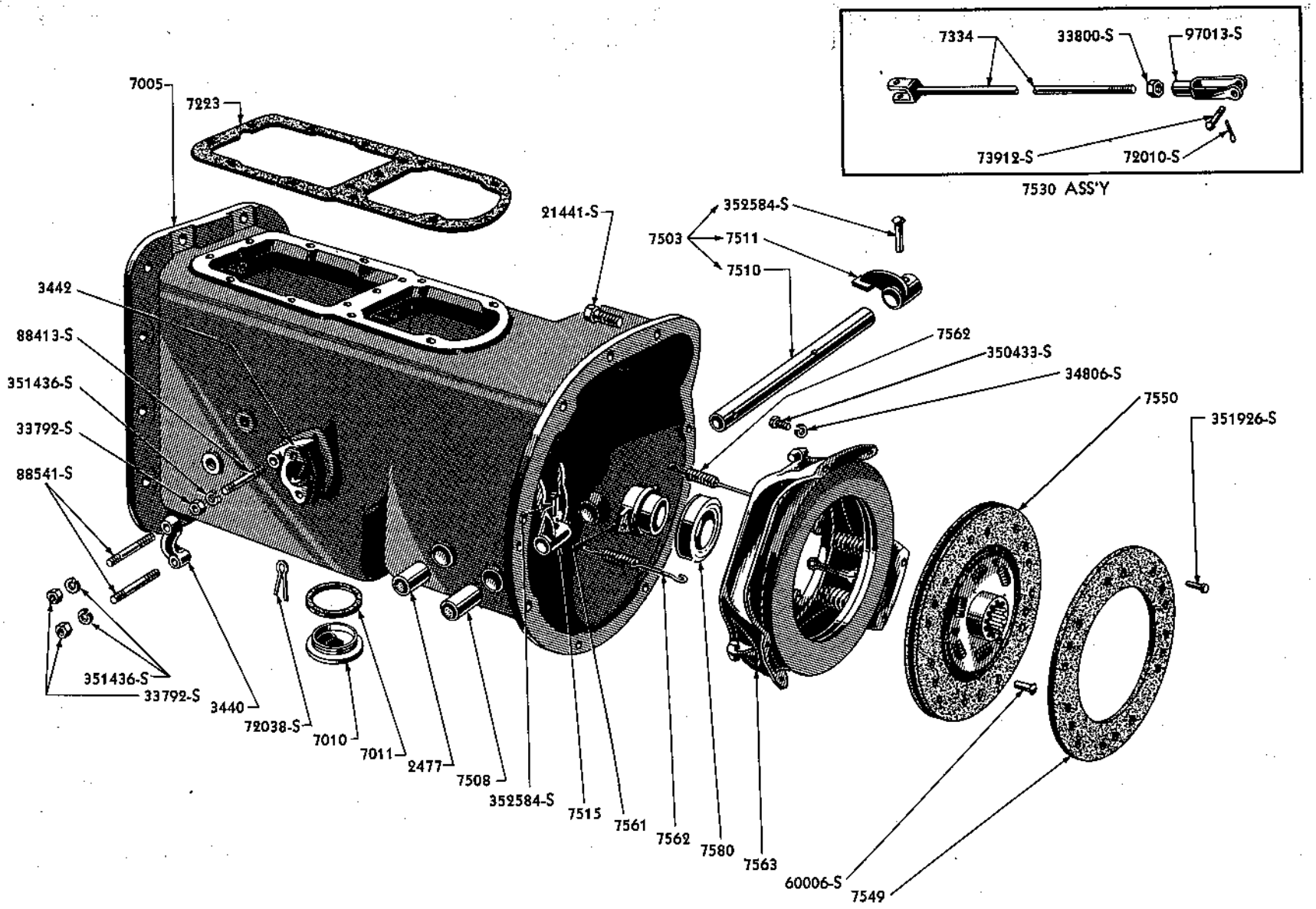

1948 TRANSMISSION CASE, CLUTCH GROUP AND RELATED PARTS

Basic numbers only shown on illustration. Order by Part Numbers shown in list of parts.

Clutch

PART NUMBER	PART NAME	NO. REQ'D	MODEL	YEAR 19
9N 7503	Shaft and arm assy (clutch release)-4.13" x 1.33"	1	9N, 9NAN, 2N, 2NAN	39-47
8N 7503	Shaft and arm assy (clutch release)-2.56" x 1.44"	1	8N	48
40 7508-A	Bushing (clutch release shaft)-1-3/8" long	2	9N, 9NAN, 2N, 2NAN, 8N	39-48
9N 7508	Bushing (clutch pedal)-3.375" long-1.24" O.D.-1.005" I.D.-.067" wall thickness	1	9N, 9NAN, 2N, 2NAN	39-47
8N 7508	Bushing (clutch pedal)-1 required with 8N-7520-pedal -1.24" long x 1.005" I.D.-split	1	8N	48
B 7510-A	Shaft (clutch release)	1	9N, 9NAN, 2N, 2NAN, 8N	39-48
9N 7511	Arm (clutch release shaft)	1	9N, 9NAN, 2N, 2NAN	39-47
	352581-S7 Pin (arm to shaft)-split-5/16" x 1-1/2"	1	9N, 9NAN, 2N, 2NAN	39-47
8N 7511	Arm (clutch release shaft)	1	8N,	48
	352584-S Pin (clutch release arm to shaft)	1	8N	48
48 7515	Fork (clutch release shaft)	1	9N, 2N, 8N	39-48
	352581-S7 Pin (fork to shaft)-split-5/16" x 1-1/2"	1	9N, 9NAN, 2N, 2NAN	39-47
	352584-S Pin (clutch release shaft to fork)	1	8N	48
9N 7520	Pedal assy (clutch)-18" x 4.5"	1	9N, 9NAN, 2N, 2NAN	39-47
8N 7520	Pedal assy (clutch)-11 1/2" x 5.75"	1	8N	48
	350901-S7 Bolt (clutch pedal to release shaft)-2 thread-hex	1	8N	48
	33739-S7 Nut (clutch pedal to release shaft)-check	1	8N	48
	358011-S7 Fitting (clutch pedal)-1/8" lubricator	1	8N	48
9N 7530	Rod and yoke assy (clutch release)	1	9N, 9NAN, 2N, 2NAN	39-47
	97013-S Clevis (release rod)-3/8"-24 x 2-1/2"	1	9N, 9NAN, 2N, 2NAN	39-47
	33800-S Nut-3/8"-24	1	9N, 9NAN, 2N, 2NAN	39-47
	73912-S7 Pin (release rod to pedal)-clevis-3/8" x 1 1/16"	1	9N, 9NAN, 2N, 2NAN	39-47
	72010-S7 Cotter pin (clevis pin)-1/8" x 5/8"	1	9N, 9NAN, 2N, 2NAN	39-47
40 7549	Facing (clutch disc)	2	9N, 9NAN, 2N, 2NAN, 8N	39-48
	351926-S Rivet (facing)-countersunk	24	9N, 9NAN, 2N, 2NAN, 8N	39-48
91A 7550	Disc assy (clutch)	1	9N, 9NAN, 2N, 2NAN, 8N	39-48
	60006-S Rivet (disc)	6	9N, 9NAN, 2N, 2NAN, 8N	39-48
9N 7561	Hub (clutch release bearing)	1	9N, 2N, 8N	39-48
9N 7562	Spring (clutch release bearing)	2	9N, 2N, 8N	39-48
09A 7563	Plate and cover assy (clutch pressure)	1	9N, 9NAN, 2N, 2NAN, 8N	39-48
	350433-S7 Bolt (clutch cover to flywheel)	6	9N, 9NAN, 2N, 2NAN, 8N	39-48
	34806-S7 Lockwasher (clutch cover to flywheel)	6	9N, 9NAN, 2N, 2NAN, 8N	39-48
78 7580	Bearing assy (clutch release)	1	9N, 2N, 8N	39-48
B 7600-A	Bearing (clutch pilot)	1	9N, 9NAN, 2N, 2NAN, 8N	39-48
70 7600-B	Bearing (clutch pilot)-optional with B-7600-A	1	9N, 9NAN, 2N, 2NAN, 8N	39-48
2N 7609	Lock (flywheel dowel retainer and bolt)	1	9N, 9NAN, 2N, 2NAN, 8N	39-48

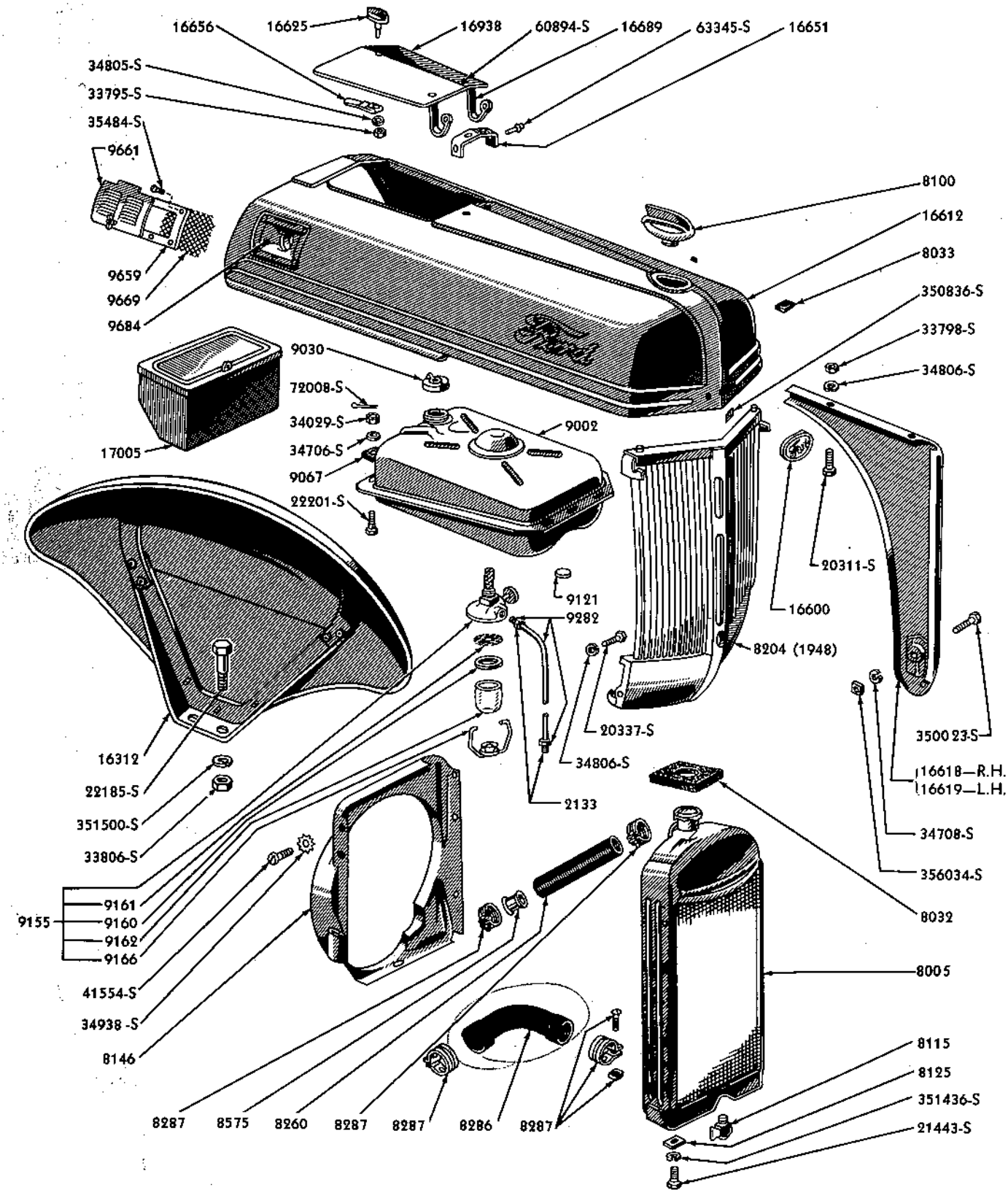

TP-16

1948 HOOD ASS'Y. AND RELATED PARTS

Basic numbers only shown on illustration. Order by Part Numbers shown in list of parts.

Radiator and Grille

PART NUMBER	PART NAME	NO. REQ'D	MODEL	YEAR 19—
2N 8005	Radiator assy	1	9N, 9NAN, 2N, 2NAN, 8N	39-48
	21443-S7 Bolt (radiator to front axle support)-7/16"-14 x .94"	2	9N, 9NAN, 2N, 2NAN, 8N	39-48
	351436-S Lockwasher (radiator support bolt)-7/16"	2	9N, 9NAN, 2N, 2NAN, 8N	39-48
2N 8032	Pad (radiator filler neck)	1	2N, 2NAN, 8N	42-48
8N 8033-A	Bumper (radiator grille to hood)	1	8N	48
9N 8100	Cap assy (radiator pressure)-round with 2 finger lug	1	9N, 9NAN	39-43
2N 8100-A	Cap assy (radiator pressure)-oblong with 1 finger lug	1	2N, 2NAN, 8N	43-48
40 8115-A	Cock assy (drain)-1/4"	2	9N, 9NAN, 2N, 2NAN, 8N	39-48
	351505-S7 Washer (used in 1/4" drain cock assy)-special flat	2	9N, 9NAN, 2N, 2NAN, 8N	39-48
	34755-S Washer (1/4")-flat	2	9N, 9NAN, 2N, 2NAN, 8N	39-48
	72000-S5 Cotter pin (drain cock)	2	9N, 9NAN, 2N, 2NAN, 8N	39-48
40 8125-A	Pad (radiator support)-synthetic rubber	2	9N, 9NAN	39-43
2N 8125	Pad (radiator support)-asbestos impregnated canvas webbing	2	2N, 2NAN, 8N	43-48
2N 8146	Shroud (fan)	1	9N, 9NAN, 2N, 2NAN, 8N	39-48
	41554-S7 Screw (shroud to radiator)-No.8-32 x 3/8"	7	9N, 9NAN, 2N, 2NAN	39-47
	34938-S7 Lockwasher (shroud to radiator)-external tooth-No.8	7	9N, 9NAN, 2N, 2NAN	39-47
8N 8204	Grille assy (radiator)	1	8N	48
9N 8206-D	Grille assy (radiator)	1	9N, 9NAN, 2N, 2NAN	39-47
9N 8260	Hose (cylinder head to radiator)-1.50" I.D.-1.88" O.D.-7.56" long	1	9N, 9NAN, 2N, 2NAN, 8N	39-48
2N 8260	Hose (cylinder head to radiator)-inlet-10" long-1.50" I.D. x 1.88" O.D.	1	9N, 9NAN, 2N, 2NAN, 8N	39-48
9N 8286	Hose (water pump to radiator)-outlet	1	9N, 9NAN, 2N, 2NAN, 8N	39-48
60 8287	Clamp (water hose)	4	9N, 9NAN, 2N, 2NAN, 8N	39-48
9N 8430-B	Support (grille)-use only on 9N-16618 and 9N-16619 panel assemblies	2	9N, 9NAN, 2N, 2NAN	39-47
	20337-S7 Bolt (side panel to grille)-5/16"-24 x 11/16"	2	9N, 9NAN, 2N, 2NAN	39-47
	34806-S7 Lockwasher (side panel to grille)-5/16"	2	9N, 9NAN, 2N, 2NAN	39-47

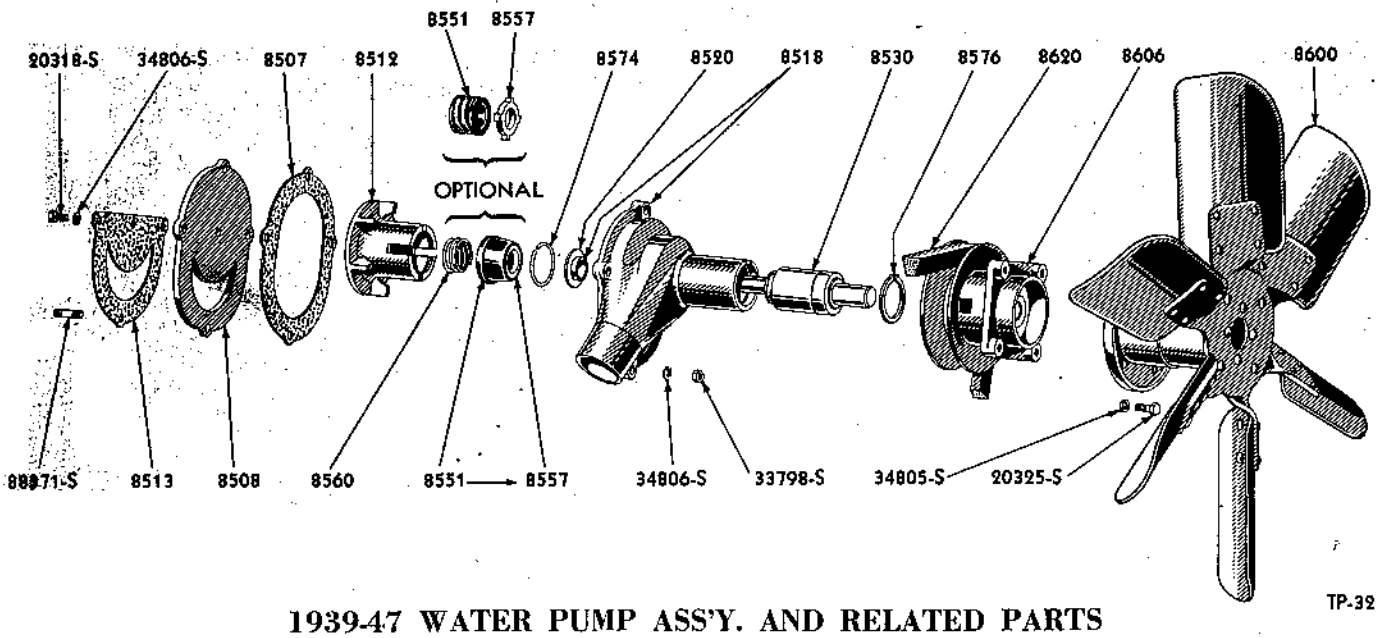

TP-32

1939-47 WATER PUMP ASS'Y. AND RELATED PARTS

Basic numbers only shown on illustration. Order by Part Numbers shown in list of parts.

PART NUMBER	PART NAME	NO. REQ'D	MODEL	YEAR 19__
	Water Pump, Fan and Fan Belt			
9N 8501	Pump assy (water)-"9N" cast in housing	1	9N, 9NAN, 2N, 2NAN	39-47
2N 8501	Pump assy (water)-"2N" cast in housing	1	8N	48
	88371-S7 Stud (water pump to block)-5/16"-24 & 5/16"-18 x 1 1/4"	3	9N, 9NAN, 2N, 2NAN, 8N	39-48
	34806-S7 Lockwasher (water pump to block)-5/16"	3	9N, 9NAN, 2N, 2NAN, 8N	39-48
	33798-S7 Nut (water pump to block stud)-5/16"-24	3	9N, 9NAN, 2N, 2NAN, 8N	39-48
9N 8507	Gasket (water pump cover)	1	9N, 9NAN, 2N, 2NAN, 8N	39-48
9N 8508	Cover (water pump)	1	9N, 9NAN, 2N, 2NAN, 8N	39-48
	20318-S7 Bolt (cover to housing)-5/16"-18 x 9/16"	1	9N, 9NAN, 2N, 2NAN	39-47
	20326-S7 Bolt (cover to housing)	1	8N	48
	34806-S7 Lockwasher (cover to housing)-3/16"	1	9N, 9NAN, 2N, 2NAN, 8N	39-48
78 8512	Impeller (water pump)	1	9N, 9NAN, 2N, 2NAN	39-47
9N 8513	Gasket (water pump rear to cylinder block)	1	9N, 9NAN, 2N, 2NAN, 8N	39-48
2N 8516	Impeller assy (water pump)	1	8N	48
9N 8518	Housing assy (water pump)	1	9N, 9NAN, 2N, 2NAN	39-47
9N 8520	Bushing (water pump housing)	1	9N, 9NAN, 2N, 2NAN	39-47
79 8530	Bearing assy (water pump)-1.1806" O.D. of bearing x .49" O.D. of shaft x 4.04" long	1	9N, 9NAN	39-42
2N 8530-B	Bearing assy (water pump)-1.1806" O.D. of bearing x .62" O.D. of shaft x 4.40" long	1	2N, 2NAN, 8N	42-48
2GA 8531	Snap ring (water pump bearing)	1	8N	48
2N 8550	Slinger (water pump bearing)	1	8N	48
68 8551	Seal assy (water pump)-use with 9N-8557	1	9N, 9NAN, 2N, 2NAN	39-47
2N 8551-B	Seal assy (water pump)-use with 2N-8557	1	9N, 9NAN, 2N, 2NAN	39-47
9N 8557	Washer (water pump)-bonded graphite-use with 68-8551	1	9N, 9NAN, 2N, 2NAN	39-47
2N 8557	Washer (water pump seal)-use with 2N-8551-B and 2N-8560	1	9N, 9NAN, 2N, 2NAN	39-47

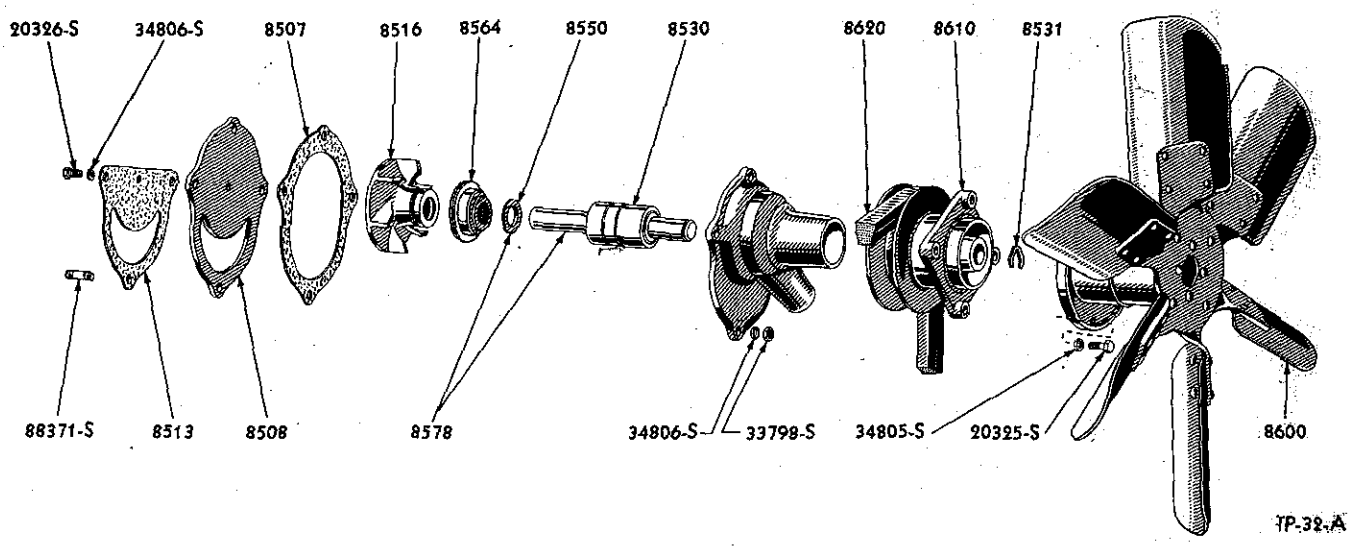

1948 WATER PUMP ASS'Y. AND RELATED PARTS

Basic numbers only shown on illustration. Order by Part Numbers shown in list of parts.

PART NUMBER	PART NAME	NO. REQ'D	MODEL	YEAR 19
68 8560-B	Spring (water pump seal)-use with 9N-8557	1	9N, 9NAN, 2N, 2NAN	39-47
2N 8560	Spring (water pump seal)-use with 2N-8551-B	1	9N, 9NAN, 2N, 2NAN	39-47
2N 8564	Seal assy (water pump)	1	8N	48
68 8574	Snap ring (water pump seal)	1	9N, 9NAN, 2N, 2NAN	39-47
9N 8575-A	Thermostat assy	1	9N, 2N, 8N	39-48
9NAN 8575-A	Thermostat assy	1	9NAN, 2NAN	39-47
9N 8576	Snap ring (water pump housing)	1	9N, 2N, 8N	39-48
2N 8578	Bearing and slinger assy (water pump)	1	8N	48
78 8600	Fan assy-4 blade-15-3/4" diameter-for export only	1	9N, 9NAN, 2N, 2NAN, 8N	39-48
9N 8600-B	Fan assy (push type)-6 blade	1	9N, 9NAN, 2N, 2NAN	39-47
9N 8600-C	Fan assy (pull type)-6 blade-for torrid zones	1	9N, 9NAN, 2N, 2NAN, 8N	39-48
9N 8606	Pulley (fan)	1	9N, 9NAN, 2N, 2NAN	39-47
	20325-S7 Bolt (fan hub to water pump pulley)-1/4"-28 x 5/8"	4	9N, 9NAN, 2N, 2NAN, 8N	39-48
	34805-S7 Lockwasher (fan hub to water pump pulley bolt)-1/4"	4	9N, 9NAN, 2N, 2NAN, 8N	39-48
2N 8610	Pulley (fan)	1	8N	48
9N 8620-A	Belt (fan)-use with 9N-10130-A generator pulley	1	9N, 9NAN	39-42
9N 8620-B	Belt (fan)-use with 9N-10130-B generator pulley	1	9N, 9NAN, 2N, 2NAN, 8N	39-48
2N 8620	Belt (fan)-for magneto conversion	1	9N, 9NAN, 2N, 2NAN	39-47

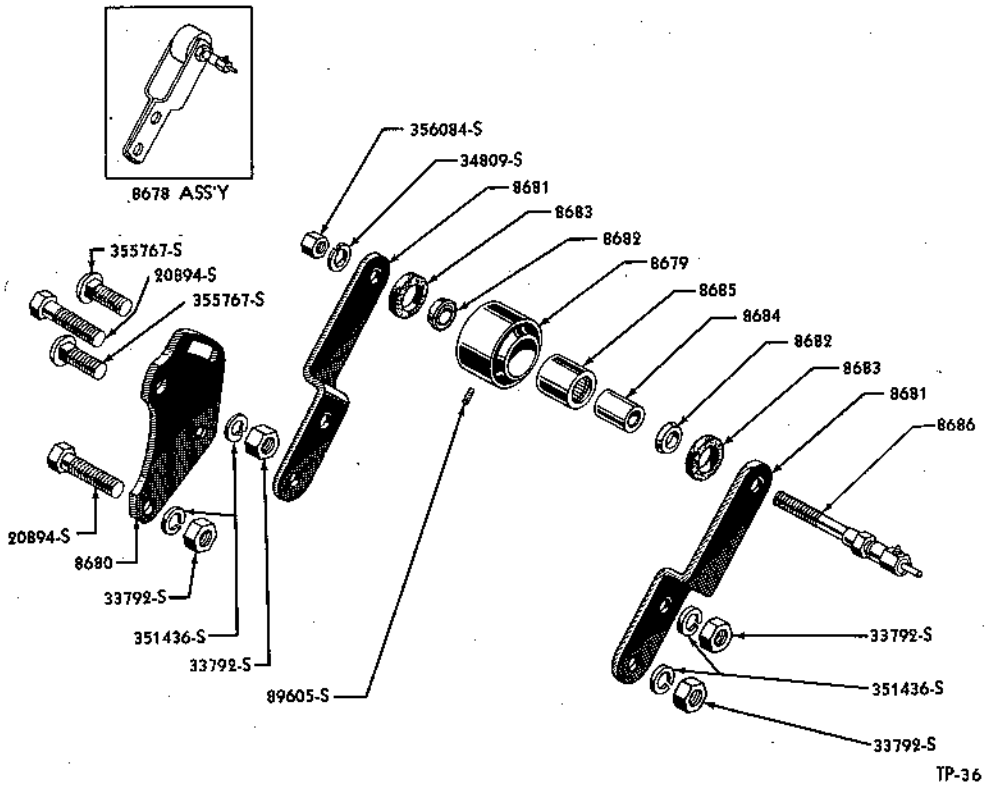

1939-48 MAGNETO IDLER PULLEY

Basic numbers only shown on illustration. Order by Part Numbers shown in list of parts.

PART NUMBER	PART NAME	NO. REQ'D	MODEL	YEAR 19___
	Idler			
2N 8678	Pulley assy (idler)-for magneto conversion	1	9N, 9NAN, 2N, 2NAN	39-47
	20894-S7 Bolt (idler to motor support)	2	9N, 9NAN, 2N, 2NAN	39-47
	351436-S7 Lockwasher (idler to motor support)	2	9N, 9NAN, 2N, 2NAN	39-47
	33792-S7 Nut (idler to motor support)	2	9N, 9NAN, 2N, 2NAN	39-47
2N 8679	Pulley (fan belt idler)-for magneto conversion	1	9N, 9NAN, 2N, 2NAN	39-47
	89605-S Screw (pulley)-cup point-set	1	9N, 9NAN, 2N, 2NAN	39-47
2N 8680	Bracket (fan belt idler)-for magneto conversion	1	9N, 9NAN, 2N, 2NAN	39-47
2N 8681	Arm (fan belt idler)-for magneto conversion	2	9N, 9NAN, 2N, 2NAN	39-47
	355767-S7 Bolt (idler arm to bracket)	2	9N, 9NAN, 2N, 2NAN	39-47
	351436-S7 Lockwasher (idler arm to bracket)	2	9N, 9NAN, 2N, 2NAN	39-47
	33792-S7 Nut (idler arm to bracket)	2	9N, 9NAN, 2N, 2NAN	39-47
2N 8682	Spacer (fan belt idler)-for magneto conversion	2	9N, 9NAN, 2N, 2NAN	39-47
2N 8683	Seal (fan belt idler pulley)-for magneto conversion	2	9N, 9NAN, 2N, 2NAN	39-47
2N 8684-A	Race (idler inner bearing)-for magneto conversion-1.010" x .50"	1	9N, 9NAN, 2N, 2NAN	39-47
2N 8685-A	Race (idler outer bearing)-for magneto conversion-1" x 1.25"	1	9N, 9NAN, 2N, 2NAN	39-47
2N 8686	Bolt (idler pulley axle)-for magneto conversion-1/2"-20 x 2.37"	1	9N, 9NAN, 2N, 2NAN	39-47
	34809-S7 Lockwasher (pulley axle bolt)	1	9N, 9NAN, 2N, 2NAN	39-47
	356084-S7 Nut (pulley axle bolt)	1	9N, 9NAN, 2N, 2NAN	39-47

Ford

TRACTOR PARTS CATALOGUE

PART NUMBER	PART NAME	NO. REQ'D	MODEL	YEAR 19__
	Fuel Tank, Fuel Lines and Sediment Bulb			
9N 9002	Tank assy (fuel)-10 gal.	1	9N, 2N, 8N	39-48
9NAN 9002	Tank assy (fuel)-10 gal.	1	9NAN, 2NAN	39-47
	22201-S7 Bolt (fuel tank)-5/16"-24 x 5/8"	3	9N, 9NAN, 2N, 2NAN, 8N	39-48
	34706-S7 Washer (fuel tank)-5/16"	3	9N, 9NAN, 2N, 2NAN, 8N	39-48
	34029-S7 Nut (fuel tank)-5/16"-24	3	9N, 9NAN, 2N, 2NAN, 8N	39-48
	72008-S Cotter pin (fuel tank)-1/16" x 5/8"	3	9N, 9NAN, 2N, 2NAN, 8N	39-48
	25620-S7 Bolt (fuel tank)-5/16"-24 x 3/4"	3	9N, 9NAN, 2N, 2NAN, 8N	39-48
9N 9030	Cap assy (fuel tank filler)	1	9N, 9NAN, 2N, 2NAN, 8N	39-48
9N 9067	Pad (fuel tank support)	3	9N, 9NAN, 2N, 2NAN, 8N	39-48
9N 9121-A	Anti-rattler (between fuel line and fuel tank)	1	9N, 9NAN, 2N, 2NAN, 8N	39-48
9N 9126	Adapter (tank to tank support)	1	9N, 9NAN, 2N, 2NAN, 8N	39-47
2N 9143	Cover assy (sediment bulb)	1	8N	48
9NAN 9155	Bulb assy (sediment)	1	9NAN, 2NAN	39-47
2N 9155-B	Valve and sediment bulb assy (fuel)	1	2N, 8N	42-48
9N 9160	Gasket (sediment bulb)	1	9N, 9NAN, 2N, 2NAN, 8N	39-48
9N 9161	Screen (sediment bulb)-1.75" O.D.-.31" round hole-center	1	9N	39-43
9NAN 9161	Screen (sediment bulb)	1	9NAN, 2NAN	39-47
	358072-S5 Plug (fuel line)	1	2NAN	42-47
2N 9161	Screen (sediment bulb)-1.75" O.D.-.257" square hole-off-center	1	2N, 8N	43-48
9N 9162	Bowl (sediment bulb)	1	9N, 9NAN, 2N, 2NAN, 8N	39-48
9N 9166	Wire and screw assy (sediment bulb clamp)	1	9N, 9NAN, 2N, 2NAN, 8N	39-48
9N 9167	Nut (sediment bulb thumb)-.87" O.D.-No.4 center hole-brass-cut-out	1	9NAN, 2NAN	39-47
2N 9167	Nut (sediment bulb thumb)-.88" O.D.-.225" center hole-round knurled	1	9N, 2N, 8N	39-48
9N 9273-A	Gauge and bracket assy (oil pressure)	1	9N, 9NAN, 2N, 2NAN, 8N	39-48
	34079-S7 Nut (oil gauge to dash)-No.10-32	2	9N, 9NAN, 2N, 2NAN, 8N	39-48
	34803-S7 Lockwasher (oil gauge to dash)-No.10	2	9N, 9NAN, 2N, 2NAN, 8N	39-48
9N 9282-A	Line assy (fuel)	1	9N, 2N, 8N	39-48
9NAN 9282	Line (fuel)-female-use with 9NAN-9697	1	9NAN, 2NAN	39-47
9NAN 9292	Line assy (fuel)	1	9NAN, 2NAN	39-47
	91A-2269 Tubing (fuel line)-.25" O.D.-.19" I.D.-supplied in 25 ft. rolls	as reqd	8N	48
	91A-2133 Nut (fuel line tube)	2	8N	48
	Manifold			
9N 9425	Manifold (intake and exhaust)	1	9N, 2N, 8N	39-48
	88403-S Stud (manifold to block)-7/16"-20 & 7/16"-14 x 1 5/8"	4	9N, 9NAN, 2N, 2NAN, 8N	39-48
	351436-S Lockwasher (manifold stud nut)-7/16"	4	9N, 9NAN, 2N, 2NAN, 8N	39-48
	33816-S Nut (manifold stud)-7/16"-20	4	9N, 9NAN, 2N, 2NAN, 8N	39-48
9NAN 9428	Manifold & stud assy (intake and exhaust)	1	9NAN, 2NAN	39-47
	356051-S Nut (manifold cover stud)	4	9NAN, 2NAN	39-47
9N 9447	Gasket (carburetor to manifold)	1	9N, 2N, 8N	39-48
9N 9448	Gasket (intake and exhaust manifold)	2	9N, 9NAN, 2N, 2NAN, 8N	39-48

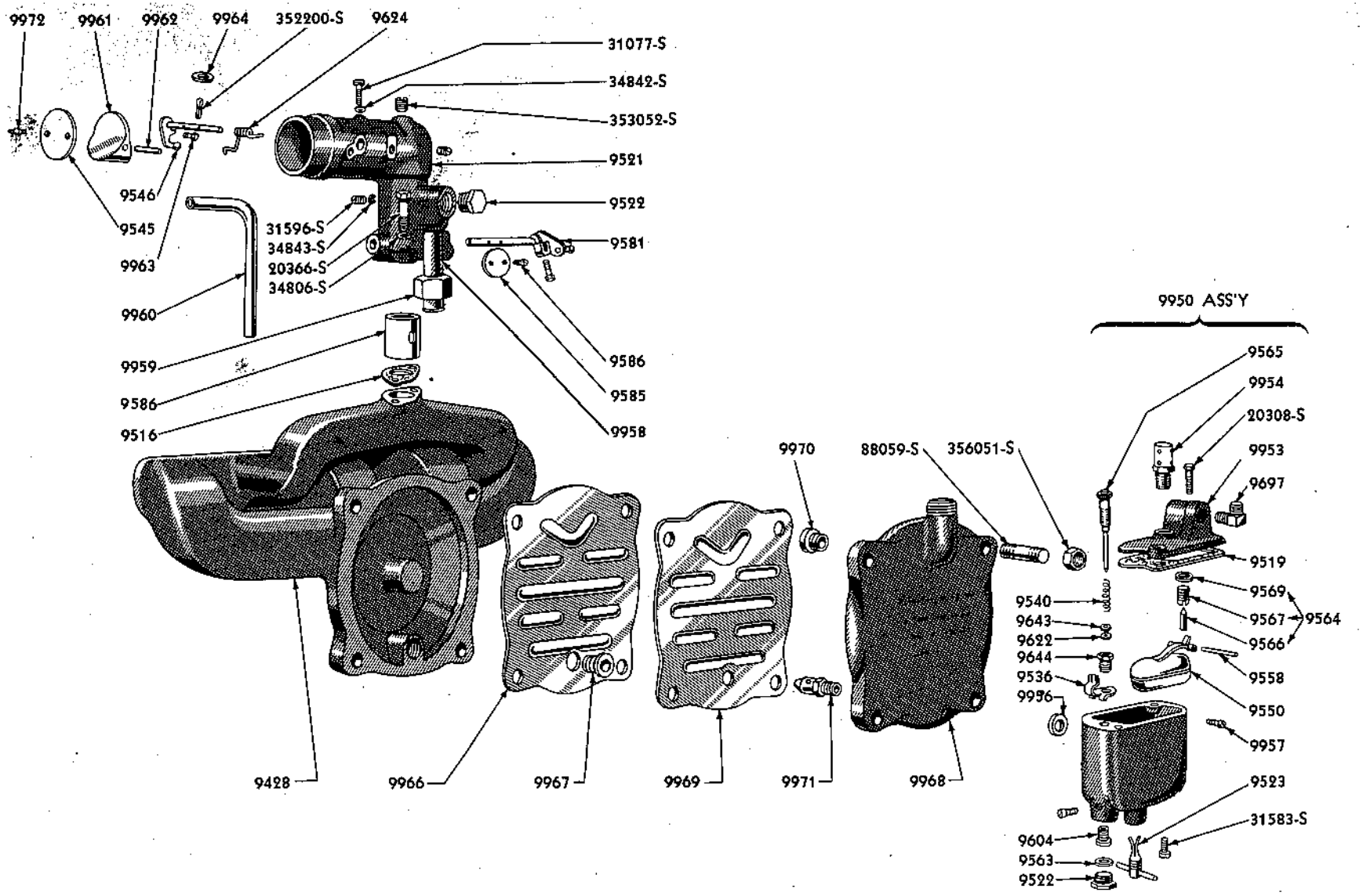

TP-34

1939-48 KEROSENE VAPORIZER ASS'Y.

Basic numbers only shown on illustration. Order by Part Numbers shown in list of parts.

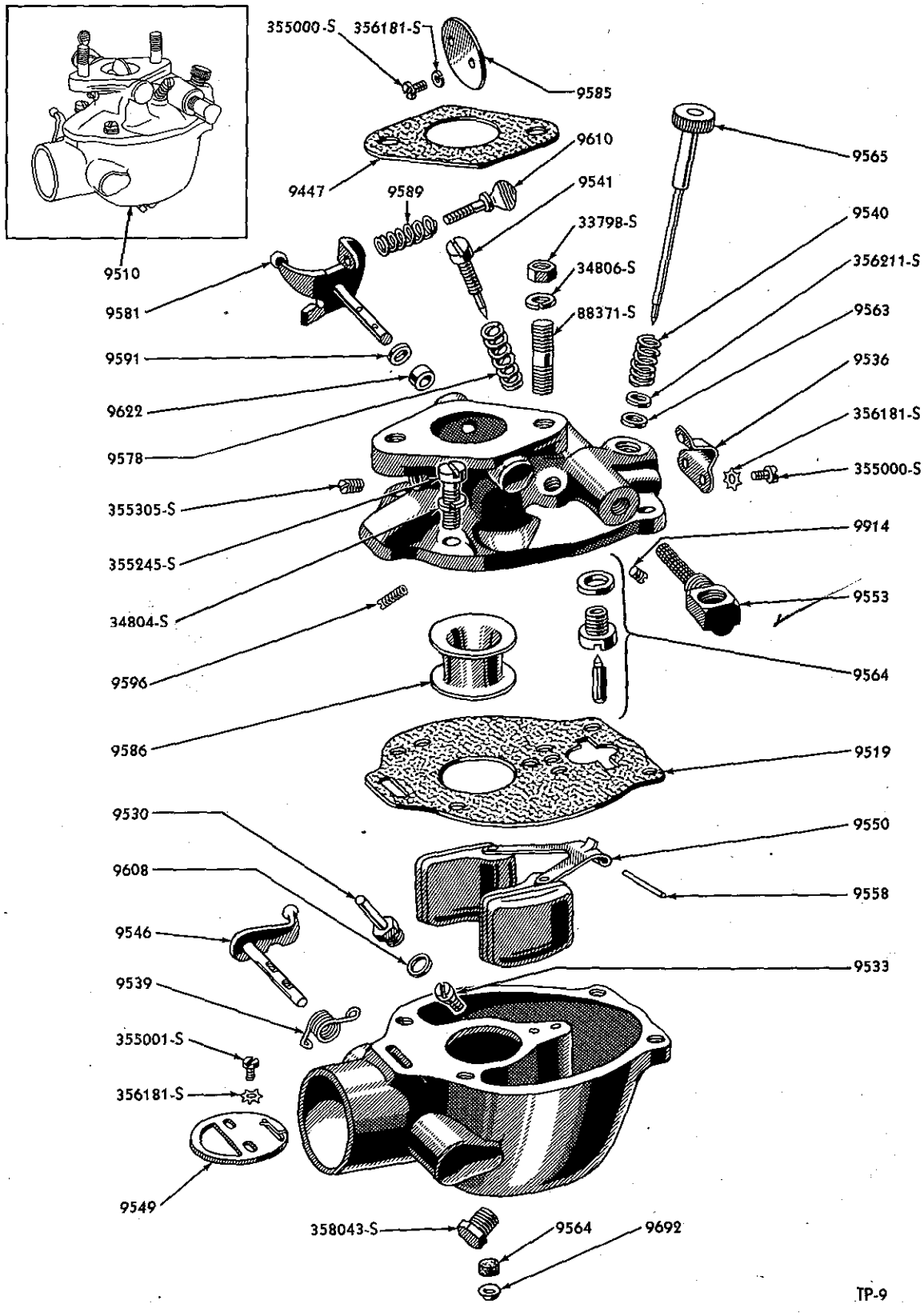

1939-48 CARBURETOR ASS'Y.

Basic numbers only shown on illustration. Order by Part Numbers shown in list of parts.

Ford

TRACTOR PARTS CATALOGUE

Carburetor, Vaporizer and Air Cleaner

PART NUMBER	PART NAME	NO. REQ'D	MODEL	YEAR 19__
9N 9502	Kit (carburetor gasket)-used with 9N-9510-A carburetor-Consists of the following 1-9N 9569 Gasket 1-9N 9519 Gasket 1-9N 9608 Gasket 1-9N 9563 Gasket	1	9N, 2N, 8N	39-48
9NAN 9502	Kit (vaporizer gasket)-used with 9NAN-9510 vaporizer -Consists of the following 1-9NAN 9516 Gasket 1-9NAN 9519 Gasket 1-9NAN 9563 Gasket 1-9NAN 9569 Gasket	1	9NAN, 2NAN	39-42
9N 9510-A	Carburetor assy-for battery ignition	1	9N, 2N, 8N	39-48
	88371-S7 Stud (carburetor to manifold)-5/16"-24 & 5/16"-18 x 1 1/4"	2	9N, 9NAN, 2N, 2NAN, 8N	39-48
	33798-S7 Nut (carburetor to manifold)-5/16"-24	2	9N, 9NAN, 2N, 2NAN, 8N	39-48
	34806-S7 Lockwasher (carburetor to manifold)-5/16"	2	9N, 9NAN, 2N, 2NAN, 8N	39-48
	355245-S7 Screw (upper to lower body)-No.12-24 x .805"	4	9N, 2N, 8N	39-48
	34804-S2 Lockwasher-No.12	4	9N, 2N, 8N	39-48
	358043-S7 Plug (lower body drain)-pipe-1/8"	1	9N, 2N, 8N	39-48
9NAN 9510	Vaporizer assy-for battery ignition	1	9NAN, 2NAN	39-47
2N 9510	Carburetor assy-for magneto conversion	1	9N, 2N	39-47
	20356-S7 Bolt (carburetor to manifold)-hex head	2	9N, 2N	39-47
	34806-S7 Lockwasher (carburetor to manifold)	2	9N, 2N	39-47
2NAN 9510	Vaporizer assy-for magneto conversion	1	9NAN, 2NAN	39-47
	355305-S Screw (throttle body)-headless-slotted-1/4"-28	1	9N, 9NAN, 2N, 2NAN	39-47
9NAN 9516	Gasket (vaporizer mixing chamber)	1	9NAN, 2NAN	39-47
9N 9519	Gasket (carburetor throttle body to bowl)	1	9N, 2N, 8N	39-48
9NAN 9519	Gasket (vaporizer float chamber cover)	1	9NAN, 2NAN	39-47
9NAN 9520	Chamber assy (vaporizer mixing)-for battery ignition	1	9NAN, 2NAN	39-47
9NAN 9520	Chamber assy (vaporizer mixing)-for magneto conversion	1	9NAN, 2NAN	39-47
	31077-S7 Screw (mixing chamber top)-fillister head	1	9NAN, 2NAN	39-47
	34842-S7 Lockwasher	1	9NAN, 2NAN	39-47
9NAN 9521	Chamber & plug assy (vaporizer mixing)-for battery ignition	1	9NAN, 2NAN	39-47
2NAN 9521	Chamber & plug assy (vaporizer mixing)-for magneto conversion	1	9NAN, 2NAN	39-47
	20366-S7 Screw (mixing chamber)	2	9NAN, 2NAN	39-47
	34806-S7 Lockwasher	2	9NAN, 2NAN	39-47
	353052-S5 Screw (mixing chamber primer)	1	9NAN, 2NAN	39-47
9NAN 9522	Plug (vaporizer adjusting needle seat)	2	9NAN, 2NAN	39-47
9NAN 9523	Valve assy (vaporizer drain)	1	9NAN, 2NAN	39-47
9N 9530	Nozzle (carburetor main)	1	9N, 2N, 8N	39-48
9N 9533	Jet (carburetor maximum fuel limiting)	1	9N, 2N, 8N	39-48
9N 9536-A	Ratchet assy (carburetor main adjustment)	1	9N, 2N, 8N	39-48
	355000-S19 Screw (ratchet spring to body)-No.4-36 x 1/4"	2	9N, 2N, 8N	39-48
	356181-S Lockwasher (ratchet spring screw)-No.4	2	9N, 2N, 8N	39-48
9NAN 9536	Ratchet (vaporizer adjusting needle)	1	9NAN, 2NAN	39-47

Ford

TRACTOR PARTS CATALOGUE

PART NUMBER	PART NAME	NO. REQ'D	MODEL	YEAR 19—
9N 9539	Spring (carburetor choke retainer)	1	9N, 2N, 8N	39-48
9N 9540-A	Spring (carburetor main adjusting needle)	1	9N, 2N, 8N	39-48
9NAN 9540	Spring (vaporizer adjusting needle washer)	1	9NAN, 2NAN	39-47
9N 9541	Needle (carburetor idling adjusting)	1	9N, 2N, 8N	39-48
9N 9545	Fly (carburetor choke)	1	9N, 2N, 8N	39-48
9NAN 9545	Plate (vaporizer main air choke)	1	9NAN, 2NAN	39-47
9N 9546	Shaft and lever assy (choke)-for battery ignition	1	9N, 2N, 8N	39-48
9NAN 9546	Shaft and lever assy (choke)-for battery ignition	1	9NAN, 2NAN	39-47
2N 9546	Shaft and lever assy (choke)-for magneto conversion	1	9N, 2N	39-47
2NAN 9546	Shaft and lever assy (choke)-for magneto conversion	1	9NAN, 2NAN	39-47
9N 9549	Fly assy (carburetor choke)	1	9N, 2N, 8N	39-48
	355001-S7 Screw (choke fly to shaft)-No.4-36 x 3/16"	2	9N, 2N, 8N	39-48
	356181-S Lockwasher-No.4	2	9N, 2N, 8N	39-48
9N 9550-A	Float and lever assy (carburetor)	1	9N, 2N, 8N	39-48
9NAN 9550	Float and lever assy (vaporizer)	1	9NAN, 2NAN	39-47
9N 9553	Elbow and strainer assy (carburetor)	1	9N, 2N, 8N	39-48
9N 9558-A	Shaft (carburetor float lever)	1	9N, 2N, 8N	39-48
9NAN 9558	Pin (vaporizer float lever)	1	9NAN, 2NAN	39-47
9N 9563	Gasket (carburetor high speed needle)	1	9N, 2N, 8N	39-48
9NAN 9563	Gasket (vaporizer adjusting needle seat plug)	1	9NAN, 2NAN	39-47
9N 9564	Valve and gasket assy (carburetor float)-matched	1	9N, 2N, 8N	39-48
9NAN 9564	Valve and gasket assy (vaporizer float)-matched	1	9NAN, 2NAN	39-47
9N 9565-A	Needle assy (carburetor main adjusting)	1	9N, 2N, 8N	39-48
	356211-S7 Washer (carburetor main adjusting needle)-1/4"	1	9N, 2N, 8N	39-48
9NAN 9565	Needle assy (vaporizer adjusting)	1	9NAN, 2NAN	39-47
78 9566	Valve (vaporizer fuel)	1	9NAN, 2NAN	39-47
9NAN 9567	Seat (vaporizer fuel valve)	1	9NAN, 2NAN	39-47
9N 9569	Gasket (carburetor valve)	1	9N, 2N, 8N	39-48
9NAN 9569	Gasket (vaporizer fuel valve seat)	1	9NAN, 2NAN	39-47
9N 9578	Spring (carburetor idle adjusting needle)	1	9N, 2N, 8N	39-48
9N 9581-A	Shaft and lever assy (carburetor throttle)	1	9N, 2N, 8N	39-48
9NAN 9581	Lever and rod assy (vaporizer throttle)	1	9NAN, 2NAN	39-47
9N 9585-A	Fly (carburetor throttle)	1	9N, 2N, 8N	39-48
9NAN 9585	Plate (vaporizer throttle)	1	9NAN, 2NAN	39-47
	355000-S19 Screw (throttle fly)-No.4-36 x 1/4"	2	9N, 2N, 8N	39-48
	355305-S Screw-headless-slotted-1/4"-28	1	9N, 2N, 8N	39-48
	356181-S Lockwasher-No.4	2	9N, 2N, 8N	39-48
40 9586	Screw (vaporizer throttle plate)	2	9NAN, 2NAN	39-47
9N 9586	Venturi (carburetor)	1	9N, 2N, 8N	39-48
9NAN 9586	Venturi (vaporizer)	1	9NAN, 2NAN	39-47
	31596-S Screw (mixing chamber to venturi)-fillister head	1	9NAN, 2NAN	39-47
	34843-S7 Lockwasher	1	9NAN, 2NAN	39-47
9N 9589	Spring (carburetor throttle lever adjusting screw)	1	9N, 2N, 8N	39-48
9N 9590	Kit (carburetor repair)	1	9N, 2N	39-47
9N 9591	Retainer (carburetor throttle shaft packing)	1	9N, 2N, 8N	39-48
9N 9596	Jet (carburetor idle)	1	9N, 2N, 8N	39-48

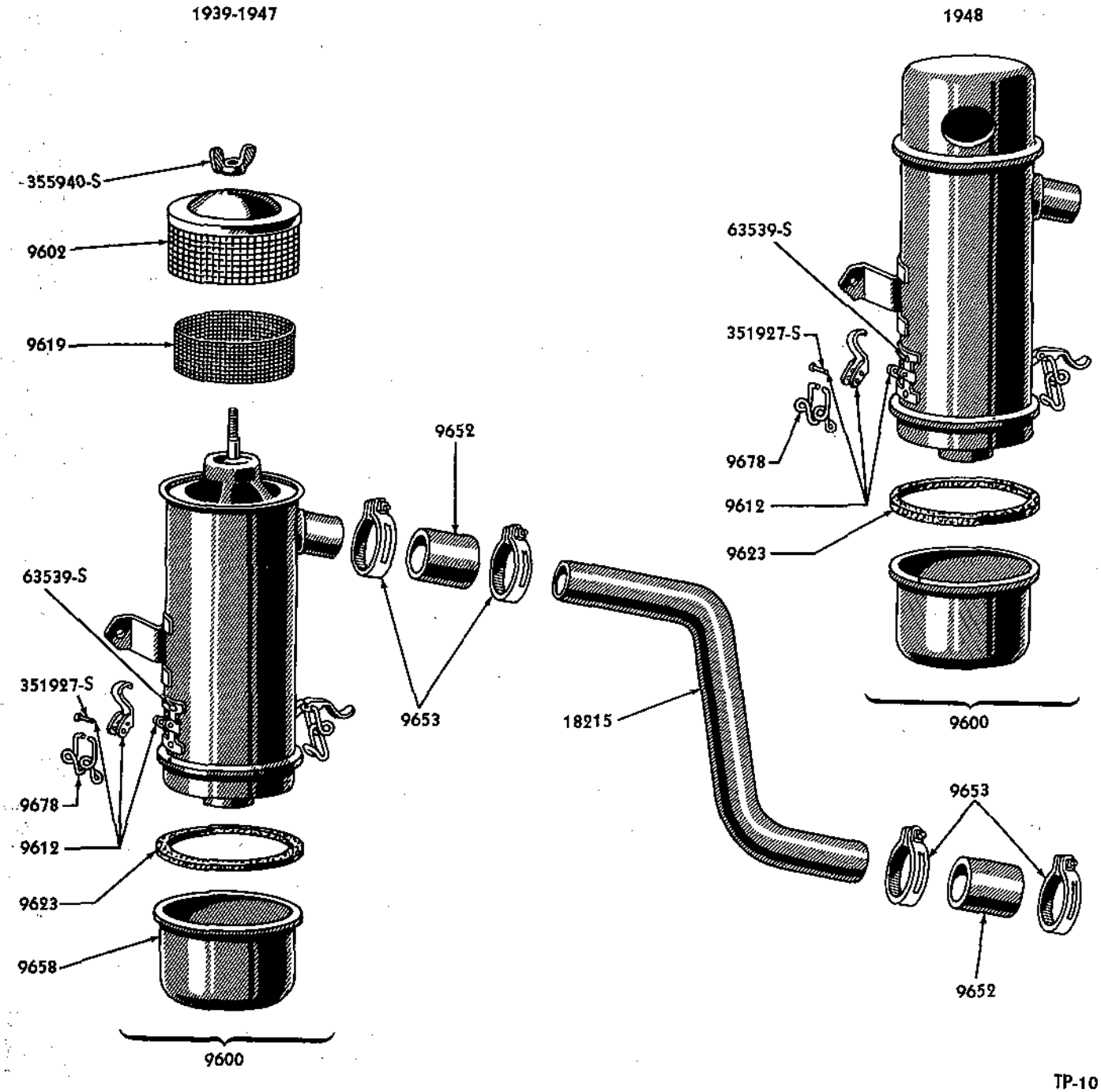

AIR CLEANER AND RELATED PARTS

Basic numbers only shown on illustration. Order by Part Numbers shown in list of parts.

Ford

TRACTOR PARTS CATALOGUE

PART NUMBER	PART NAME	NO. REQ'D	MODEL	YEAR 19__
9N 9600-C	Cleaner assy (air)-with removable top assy for cleaning-with thumb screw & clamp oil cup retainer	1	9N, 9NAN, 2N, 2NAN	39-47
9N 9600-D	Cleaner assy (air)-with removable top assy for cleaning-with toggle lock oil cup retainer	1	2N, 2NAN	43-47
	355940-S7 Wing nut (cover to screen)-1/4"-20	1	9N, 9NAN, 2N, 2NAN	39-47
	33792-S7 Nut (air cleaner to battery support)-7/16"-20	2	9N, 9NAN, 2N, 2NAN	39-47
	351436-S Lockwasher (air cleaner to battery support)-7/16"	2	9N, 9NAN, 2N, 2NAN	39-47
	21440-S7 Bolt-7/16"-14-use with 9N-3551-E	2	9N, 9NAN, 2N, 2NAN	39-47
8N 9600	Cleaner assy (air)-without removable top assy	1	8N	48
9N 9602-C2	Cover assy (air cleaner)-use with 9N-9600-C air cleaner	1	9N, 9NAN, 2N, 2NAN	39-47
9N 9602-C3	Cover assy (air cleaner)-use with 9N-9600-D air cleaner	1	2N, 2NAN	43-47
9NAN 9604	Bushing (vaporizer adjusting needle)	1	9NAN, 2NAN	39-47
9N 9608	Gasket (carburetor pump check valve screw)	1	9N, 2N, 8N	39-48
9N 9610	Screw (carburetor throttle adjusting)	1	9N, 2N, 8N	39-48
9N 9612	Lock assy (air cleaner oil cup toggle)	2	2N, 2NAN, 8N	43-48
	63539-S Rivet-special	4	2N, 2NAN, 8N	43-48
9N 9619-C	Screen (air cleaner)-inner-used in 9N-9600-C assy	1	9N, 9NAN, 2N, 2NAN	39-47
9N 9622-A	Packing (carburetor throttle shaft)	1	9N, 2N, 8N	39-48
9NAN 9622	Packing (vaporizer adjusting needle)	1	9NAN, 2NAN	39-47
9N 9623	Gasket (air cleaner body to cup)-.20" x .15" x .09"	1	9N, 9NAN, 2N, 2NAN	39-47
9N 9623-B	Gasket (air cleaner body to cup)-.18" x 14.75" x .235"	1	8N	48
9NAN 9624	Spring (vaporizer choke lever)-for battery ignition	1	9NAN, 2NAN	39-47
2NAN 9624	Spring (vaporizer choke lever)-for magneto conversion	1	9NAN, 2NAN	39-47
9N 9628-C	Clamp assy (air cleaner)	1	9N, 9NAN, 2N, 2NAN	39-47
9NAN 9643	Washer (vaporizer adjusting needle)	1	9NAN, 2NAN	39-47
9NAN 9644	Bushing (vaporizer adjusting needle)	1	9NAN, 2NAN	39-47
9N 9652	Hose (air cleaner outlet pipe)	2	9N, 9NAN, 2N, 2NAN, 8N	39-48
9N 9653	Clamp (air cleaner hose)	4	9N, 9NAN, 2N, 2NAN, 8N	39-48
9N 9658-C	Cup assy (air cleaner oil)	1	9N, 9NAN, 2N, 2NAN	39-47
9N 9658-D	Cup assy (air cleaner oil)	1	2N, 2NAN	43-47
8N 9659	Plate (air cleaner tapping)	1	8N	48
	35484-S7 Bolt (air cleaner funnel to hood)	4	8N	48
8N 9661	Cover and screw assy (air cleaner)	1	8N	48
8N 9669	Screen (air cleaner funnel)	1	8N	48

Ford

TRACTOR PARTS CATALOGUE

PART NUMBER	PART NAME	NO. REQ'D	MODEL	YEAR 19__
9N 9678	Spring (air cleaner toggle)	1	2N, 2NAN	43-47
	351927-S7 Rivet (toggle spring)	1	2N, 2NAN	43-47
8N 9684	Funnel (air cleaner)	1	8N, 8NAN	48
9N 9692	Plug (carburetor strainer retainer expansion)	1	9N, 2N, 8N	39-48
9N 9694	Strainer (carburetor lower body felt drain)	1	9N, 2N, 8N	39-48
9NAN 9697	Elbow (fuel line)	1	9NAN, 2NAN	39-47
9N 9700-A	Rod assy (choke control)-for battery ignition	1	9N, 2N	39-47
9NAN 9700	Lever assy (choke control)-for battery ignition	1	9NAN, 2NAN	39-47
2N 9700-A	Rod assy (choke control)-less knob-for magneto conversion	1	9NAN, 2NAN	39-47
2N 9700-B	Rod assy (choke control)-less knob-for magneto conversion on tractor with generator and without starter	1	9NAN, 2NAN	39-47
2NAN 9700	Lever assy (choke control)-for magneto conversion	1	9NAN, 2NAN	39-47
8N 9700	Rod assy (choke control)-for battery ignition	1	8N	48
9N 9703	Knob (choke)	1	9N, 2N, 8N	39-48
9N 9703	Knob (light switch)-used with 9N-18438-B lighting kit		Refer to Starter Group	
2N 9718	Clip (choke rod)-front	as reqd	9N, 9NAN, 2N, 2NAN	39-47
8N 9796	Bracket (throttle control rod)	1	8N	48
	20336-S7 Bolt (throttle control rod bracket)	2	8N	48
	33797-S7 Nut (throttle control rod bracket bolt)	2	8N	48
	34806-S Lockwasher	2	8N	48
2N 9802	Shaft assy (throttle control)	1	9N, 9NAN, 2N, 2NAN	39-47
9N 9805	Rod (throttle control)	1	9N, 9NAN, 2N, 2NAN	39-47
8N 9805-A	Arm assy (throttle control rod quadrant)	1	8N	48
9N 9806	Spring (throttle control rod)-1.24" free length-.46" I.D.	1	9N, 9NAN, 2N, 2NAN	39-47
8N 9806	Spring (throttle control rod)-2.75" free length-.42" I.D.	1	8N	48
9N 9807	Lever assy (throttle control rod)-8.50" long with notch for stop washer	1	9N, 9NAN, 2N, 2NAN	39-47
	33796-S7 Nut (throttle control rod lever bolt)	1	8N	48
	34805-S7 Lockwasher	1	8N	48
	20405-S7 Bolt (throttle control rod lever)-1/4"-28 x 1 1/8"	1	8N	48
8N 9807	Lever assy (throttle control rod)-20.43" long	1	8N	48
9N 9810	Socket assy (throttle)	1	9N, 9NAN, 2N, 2NAN	39-47
9N 9812	Retainer (throttle rod spring)	1	9N, 9NAN, 2N, 2NAN	39-47
9N 9815-B	Rod assy (throttle shaft to governor)	1	9N, 9NAN, 2N, 2NAN	39-47
8N 9815	Rod assy (throttle control)	1	8N	48
9N 9818-A	Rod assy (governor to carburetor)	1	9N, 2N, 8N	39-48
9NAN 9818	Rod assy (governor to carburetor)	1	9NAN, 2NAN	39-47
9N 9819-A	Pin (throttle control lever to throttle rod)	1	9N, 9NAN, 2N, 2NAN	39-47
9N 9820	Quadrant (throttle control)	1	9N, 9NAN, 2N, 2NAN	39-47
	20346-S7 Bolt (quadrant to upper housing)-5/16"-18 x 3/4"	2	9N, 9NAN, 2N, 2NAN	39-47

Ford

TRACTOR PARTS CATALOGUE

PART NUMBER	PART NAME	NO. REQ'D	MODEL	YEAR 19___
9N 9824-A	Bracket (throttle control shaft)	1	9N, 9NAN, 2N, 2NAN	39-47
9N 9827	Spring (governor compensating)-3.7" free length-.44" O.D.	1	9N, 9NAN, 2N, 2NAN	39-47
8N 9827	Spring (governor compensating)-4.95" free length-.44" O.D.	1	8N	48
9N 9828	Pin (control shaft bracket)	1	9N, 9NAN	39-42
8N 9855	Plate (governor compensating spring anchor)	1	8N	48
8N 9889-A	Quadrant (throttle control)	1	8N	48
	28319-S7 Screw (throttle quadrant)-No.12-24 x 3/8"-oval head	3	8N	48
9N 9914	Jet (carburetor economizer)	1	9N, 2N, 8N	39-48
9NAN 9950	Chamber assy (vaporizer float)-complete	1	9NAN, 2NAN	39-47
	31583-S7 Plug (vaporizer fuel passage)	2	9NAN, 2NAN	39-47
9NAN 9953	Cover assy (vaporizer float chamber)	1	9NAN, 2NAN	39-47
	20308-S7 Screw (float chamber cover)	2	9NAN, 2NAN	39-47
9NAN 9954	Vent assy (vaporizer float chamber)	1	9NAN, 2NAN	39-47
9NAN 9956	Gasket (vaporizer float chamber)	1	9NAN, 2NAN	39-47
9NAN 9957	Screw (vaporizer float chamber)	2	9NAN, 2NAN	39-47
9NAN 9958	Tube (vaporizer vapor outlet)	1	9NAN, 2NAN	39-47
9NAN 9959	Nut (vaporizer vapor outlet tube)	1	9NAN, 2NAN	39-47
9NAN 9960	Tube (vaporizer priiary air)	1	9NAN, 2NAN	39-47
9NAN 9961	Valve (vaporizer air intake)-automatic	1	9NAN, 2NAN	39-47
9NAN 9962-B	Shaft assy (vaporizer air intake valve)	1	9NAN, 2NAN	39-47
9NAN 9963-B	Screw (vaporizer air intake valve shaft)	1	9NAN, 2NAN	39-47
9NAN 9964	Plate (vaporizer primary air choke)	1	9NAN, 2NAN	39-47
	352200-S Cotter pin (choke plate)	1	9NAN, 2NAN	39-47
9NAN 9966	Plate (manifold vaporizer)	1	9NAN, 2NAN	39-47
9NAN 9967	Bushing (manifold vaporizing plate)	1	9NAN, 2NAN	39-47
9NAN 9968	Cover (manifold vaporizing chamber)-outer	1	9NAN, 2NAN	39-47
9NAN 9969	Plate (manifold vaporizing plate cover)-inner	1	9NAN, 2NAN	39-47
9NAN 9970	Bushing (vaporizer manifold cover plate)	1	9NAN, 2NAN	39-47
9NAN 9971	Jet (vaporizer fuel)	1	9NAN, 2NAN	39-47
9NAN 9972	Pin (vaporizer choke plate)	1	9NAN, 2NAN	39-47
9NAN 9975-B	Shaft (vaporizer air valve)-.092"-.094" diameter	1	9NAN, 2NAN	39-47
9NAN 9976-B	Retainer (vaporizer air valve shaft)	1	9NAN, 2NAN	39-47

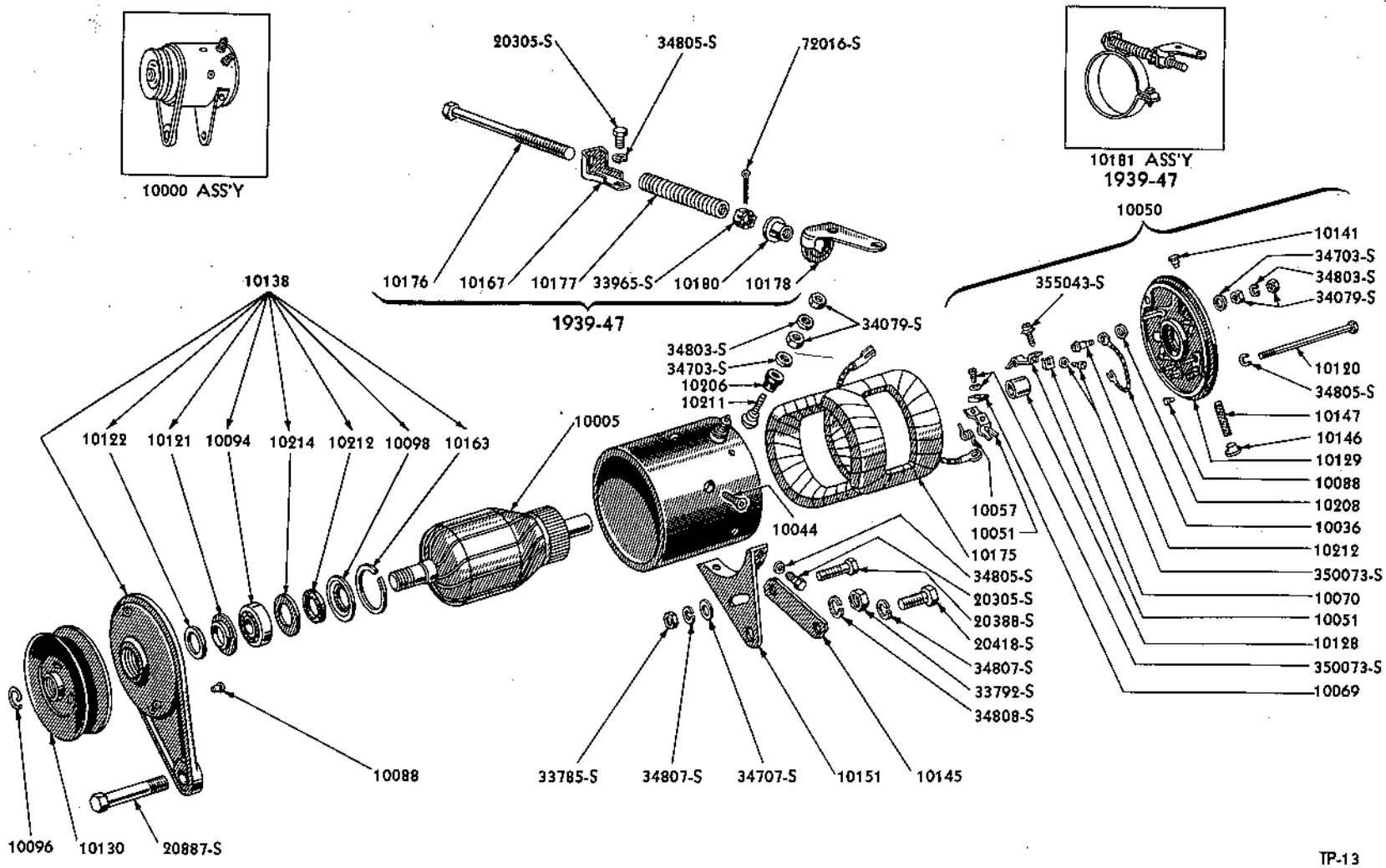

1948 GENERATOR AND RELATED PARTS

Basic numbers only shown on illustration. Order by Part Numbers shown in list of parts.

Ford

TRACTOR PARTS CATALOGUE

Generator

PART NUMBER	PART NAME	NO. REQ'D	MODEL	YEAR 19____
8N 10000	Generator assy	1	9N, 9NAN, 2N, 2NAN, 8N	39-48
9N 10005-C	Armature assy	1	9N, 9NAN, 2N, 2NAN, 8N	39-48
9N 10036	Wire assy (brush to terminal lead)	1	9N, 9NAN, 2N, 2NAN, 8N	39-48
2N 10037	Connector (ground to field terminal)-used with 8N-10000 generator having 9N-10505-B cutout	1	8N	48
68 10044	Screw (generator pole piece)	2	9N, 9NAN, 2N, 2NAN, 8N	39-48
68 10044	Screw (starter pole piece)		Refer to Starter & Drive Group	
9N 10050-C	Plate (generator end)	1	9N, 9NAN, 2N, 2NAN, 8N	39-48
40 10051	Holder (generator brush)	3	9N, 9NAN, 2N, 2NAN, 8N	39-48
	31061-S7 Screw (brush holder)-No.8-32 x 1/2"	3	9N, 9NAN, 2N, 2NAN, 8N	39-48
	34902-S7 Washer (brush holder screw)	3	9N, 9NAN, 2N, 2NAN, 8N	39-48
	350073-S7 Screw and lockwasher assy (generator brush retaining)-No.8-32 x 1/2"-fillister head	3	8N	48
	355043-S7 Screw and lockwasher assy (generator brush retaining)-No.8-32 x 3/16"-fillister head	2	8N	48
40 10057	Spring (generator brush)	3	2N, 2NAN, 8N	42-48
9N 10057	Spring (generator brush)	3	9N, 9NAN	39-41
40 10069	Brush assy (generator main)	2	2N, 2NAN, 8N	42-48
9N 10069-A	Brush assy (generator)-.50" x .25"-rolled end-.145" round bolt hole	3	9N, 9NAN	39-41
9N 10069-B	Brush assy (generator)-.50" x .50"-rolled end-"L shaped with .32" x .205" oblong bolt hole	3	2N, 2NAN	41-47
40 10070	Brush (generator third)	1	9N, 9NAN, 2N, 2NAN, 8N	39-48
18 10088	Dowel (generator front end plate to frame)	1	9N, 9NAN, 2N, 2NAN, 8N	39-48
18 10088	Dowel (generator brush end plate to frame)	1	9N, 9NAN, 2N, 2NAN, 8N	39-48
18 10088	Dowel (starter end plate)		Refer to Starter & Drive Group	
9N 10094	Bearing (generator front end)	1	9N, 9NAN, 2N, 2NAN	39-47
9N 10094	Bearing (generator front end)	2	8N	48
9N 10096-A	Ring (gen. pulley retainer)-.495" I.D. x .20"opening	1	9N, 9NAN	39-41
9N 10096-B	Ring (generator pulley retainer)	1	2N, 2NAN	42-47
9N 10096-C	Ring (gen. pulley retainer)-.540" I.D. x .31"opening	1	8N	48
9N 10098	Retainer (generator end plate grease)	1	9N, 9NAN, 2N, 2NAN, 8N	39-48
18 10120-A	Bolt (generator frame thru)	2	9N, 9NAN, 2N, 2NAN, 8N	39-48
	34805-S7 Lockwasher-1/4"	2	9N, 9NAN, 2N, 2NAN, 8N	39-48
9N 10121	Retainer (generator bearing oil seal)	1	9N, 9NAN, 2N, 2NAN, 8N	39-48
9N 10122	Oil seal (generator front end plate)	1	9N, 9NAN, 2N, 2NAN, 8N	39-48
9N 10128-B	Bearing (end plate)-oilless-bronze	1	9N, 9NAN, 2N, 2NAN, 8N	39-48
9N 10129-B	Plate assy (generator end brush)	1	9N, 9NAN, 2N, 2NAN, 8N	39-48
9N 10130-A	Pulley (generator)-3.50" diameter	1	9N, 9NAN, 2N, 2NAN, 8N	39-48
9N 10130-B	Pulley (generator)-3.78" diameter	1	9N, 9NAN, 2N, 2NAN, 8N	39-48
9N 10138-C	Plate assy (generator front end)	1	9N, 9NAN, 2N, 2NAN, 8N	39-48
B 10141	Cup (generator bearing oil)	1	9N, 9NAN, 2N, 2NAN, 8N	39-48
18 10142	Band (starter cover)-4 17/32" diameter		Refer to Starter & Drive Group	
8N 10145	Arm (generator adjusting)	1	8N	48
18 10146	Plug (generator brush end plate)	1	9N, 9NAN, 2N, 2NAN, 8N	39-48
18 10147	Wick (generator end plate bearing)	1	9N, 9NAN, 2N, 2NAN, 8N	39-48
9N 10151-C	Bracket (generator support)	1	9N, 9NAN, 2N, 2NAN, 8N	39-48
	20305-S7 Bolt (bracket to frame)-1/4"-28 x 7/16"	2	9N, 9NAN, 2N, 2NAN, 8N	39-48
	34805-S7 Lockwasher-1/4"	2	9N, 9NAN, 2N, 2NAN, 8N	39-48
	20887-S7 Bolt (support bracket to engine)-7/16"-20 x 3.00"-hex	1	9N, 9NAN, 2N, 2NAN, 8N	39-48
	356432-S7 Washer-shakeproof-1.10"	1	9N, 9NAN, 2N, 2NAN, 8N	39-48
	33787-S7 Nut-7/16"-20-hex	1	9N, 9NAN, 2N, 2NAN, 8N	39-48

Ford

TRACTOR PARTS CATALOGUE

PART NUMBER	PART NAME	NO. REQ'D	MODEL	YEAR 19—
8N 10151	Bracket (generator support)	1	8N, 8NAN	48
9N 10163	Ring (generator bearing stop)	1	9N, 9NAN, 2N, 2NAN, 8N	39-48
2N 10167	Bracket (belt adjustment)	1	9N, 9NAN, 2N, 2NAN	39-47
	20305-S7 Bolt (adjustment bracket to frame)-1/4"-28 x 7/16"	2	9N, 9NAN, 2N, 2NAN	39-47
	34805-S7 Lockwasher-1/4"	2	9N, 9NAN, 2N, 2NAN	39-47
	350236-S7 Bolt & lockwasher assy (generator support to generator)-1/4"-28 x 7/16"-hex	2	8N	48
9N 10175-C	Coil assy (generator field)-3.12" O.D.	1	9N, 9NAN, 2N, 2NAN	39-47
8N 10175-A	Coil assy (generator field)-3.87" O.D.	1	8N	48
	31027-S7 Screw (field coil to brush)-No.8-32 x 3/16"	2	9N, 9NAN, 2N, 2NAN, 8N	39-48
	34902-S7 Washer (brush to field coil screw)-No.8	2	9N, 9NAN, 2N, 2NAN, 8N	39-48
2N 10176	Bolt (belt adjustment)	1	9N, 9NAN, 2N, 2NAN	39-47
2N 10177	Spring (belt adjustment)	1	9N, 9NAN, 2N, 2NAN	39-47
	33965-S7 Nut (adjusting bolt to spring)-castle-3/8"-24	1	9N, 9NAN, 2N, 2NAN	39-47
	72016-S7 Cotter pin (adjustment bolt to spring)-3/32" x 3/4"	1	9N, 9NAN, 2N, 2NAN	39-47
2N 10178	Bracket (belt adjustment-cylinder head)	1	9N, 9NAN, 2N, 2NAN	39-47
2N 10179	Clamp and bracket assy-used with 2N-10181 Generator Belt Adjustment Kit	1	9N, 9NAN, 2N, 2NAN	39-47
2N 10180	Nut (belt adjustment)-shoulder	1	9N, 9NAN, 2N, 2NAN	39-47
2N 10181	Kit (generator belt adjustment)-Consists of the following 1-2N 10179 Clamp & Bracket 1-2N 10177 Spring 1-2N 10176 Bolt 1-2N 10178 Bracket 1-2N 10180 Nut 1- 72016-S7 C/Pin 1- 33965-S7 Nut 2- 20366-S7 Bolt 2- 34806-S7 Lockwasher 1- 33797-S7 Nut	1	9N, 9NAN, 2N, 2NAN	39-47
	20366-S7 Bolt (generator belt adjusting kit)	2	9N, 9NAN, 2N, 2NAN	39-47
	34806-S7 Lockwasher (generator belt adjusting kit)	2	9N, 9NAN, 2N, 2NAN	39-47
	33797-S7 Nut (generator belt adjusting kit)	1	9N, 9NAN, 2N, 2NAN	39-47
81A 10206	Insulator (generator terminal screw outer)	1	8N	48
81A 10208	Insulator (generator end plate)	1	9N, 9NAN, 2N, 2NAN, 8N	39-48
11A 10211-B	Screw (generator terminal)	1	8N	48
	34703-S7 Washer (generator terminal)	1	8N	48
	34803-S7 Lockwasher (generator terminal)	1	8N	48
	34079-S7 Nut (generator terminal screw)	2	8N	48
9N 10212	Oil seal (generator front end plate)	1	9N, 9NAN, 2N, 2NAN, 8N	39-48
9N 10214	Retainer (generator oil seal)	1	9N, 9NAN, 2N, 2NAN, 8N	39-48
9N 10505-B	Cut-out assy (generator)	1	9N, 9NAN, 2N, 2NAN	39-47
	20346-S7 Bolt (cut-out to battery support bracket to steering housing)-5/16"-18 x 3/4"	2	9N, 9NAN, 2N, 2NAN	39-47
	34806-S7 Lockwasher-5/16"	2	9N, 9NAN, 2N, 2NAN	39-47
8N 10505	Regulator assy (generator)	1	8N	48
B 10563	Insulator (cut-out terminal)	2	9N, 9NAN, 2N, 2NAN	39-47
B 10564	Bolt (cut-out terminal)	2	9N, 9NAN, 2N, 2NAN	39-47
	34803-S7 Lockwasher-No.10	2	9N, 9NAN, 2N, 2NAN	39-47
9N 10597-B	Plate (cut-out adapter)	1	9N, 9NAN, 2N, 2NAN	39-47

Ford

TRACTOR PARTS CATALOGUE

PART NUMBER	PART NAME	NO. REQ'D	MODEL	YEAR 19__
	Battery			
2N 10655-A	Battery assy-with electrolyte-13 plate-domestic	1	9N, 9NAN, 2N, 2NAN, 8N	39-48
2N 10657	Battery assy-dry-for export	1	9N, 9NAN, 2N, 2NAN, 8N	39-48
8N 10673	Plate (voltage regulator mounting)	1	8N	48
01A 10720	Plug (battery filler)	3	9N, 9NAN, 2N, 2NAN, 8N	39-48
2N 10721	Cover (battery clamping)	1	2N, 2NAN	42-47
	8N-5162 Clamp and cover assy (battery)	1	8N	48
	34806-S7 Lockwasher (hold down bar to cover)-5/16"	2	9N, 9NAN, 2N, 2NAN	39-47
	350984-S7 Wing nut (hold down bar to cover)-5/16"-24	2	9N, 9NAN, 2N, 2NAN	39-47
01A 10726	Insulator (battery strap)	1	9N, 9NAN, 2N, 2NAN	39-47
9N 10728-C	Bar (battery clamp hold down)-RH	1	9N, 9NAN	39-42
2N 10728	Bar (battery clamp hold down)	2	2N, 2NAN	42-47
8N 10728	Bar (battery clamp hold down)-RH	1	8N	48
2N 10732	Support assy (battery and bracket)	1	2N, 2NAN	43-47
	20487-S7 Bolt (battery cover hold-down)-5/16"-24 x 1.62"	1	8N	48
	34806-S7 Lockwasher (battery cover hold-down bolt)-5/16"	1	8N	48
	350990-S7 Nut (battery cover hold-down bolt)-wing	1	8N	48
	350996-S Nut (battery cover hold-down bolt)-speed	1	8N	48
	355596-S Bolt (support to air cleaner)-7/16"-20	2	9N, 9NAN, 2N, 2NAN	39-47
	350320-S7 Bolt (support to tool box)-5/16"-24 x .63"	2	9N, 9NAN, 2N, 2NAN	39-47
	33792-S7 Nut (tool box support bolt)-5/16"-24	2	9N, 9NAN, 2N, 2NAN	39-47
	34806-S7 Lockwasher (tool box support bolt)-5/16"	2	9N, 9NAN, 2N, 2NAN	39-47
8N 10732	Support assy (battery)	1	8N	48
9N 10737	Plate (battery cover)	1	9N, 9NAN, 2N, 2NAN	39-47
9N 10748	Bar (battery clamp hold-down)-LH	1	9N, 9NAN	39-42
	Ammeter and Temperature Indicator			
9N 10850-B	Ammeter assy	1	9N, 9NAN, 2N, 2NAN, 8N	39-48
9N 10879	Bracket (ammeter clamp)	1	9N, 9NAN, 2N, 2NAN, 8N	39-48
	34079-S7 Nut (ammeter to dash)-No. 10-32	2	9N, 9NAN, 2N, 2NAN, 8N	39-48
	34803-S7 Lockwasher (ammeter to dash)-No. 10	2	9N, 9NAN, 2N, 2NAN, 8N	39-48
9NAN 10883	Indicator assy (heat)	1	9NAN, 2NAN	39-47
	34079-S Nut (indicator to dash)-hex	2	8N	48
	34803-S Lockwasher (indicator to dash)	2	8N	48
9NAN 10888	Plate (heat indicator warning)-export only	1	9NAN, 2NAN	39-47
2N 10912	Bracket (indicator to dash)	1	9NAN, 2NAN	39-47
2NAN 10931	Bushing (temperature indicator bulb)-use with 9NAN-6050	1	9NAN, 2NAN	39-47

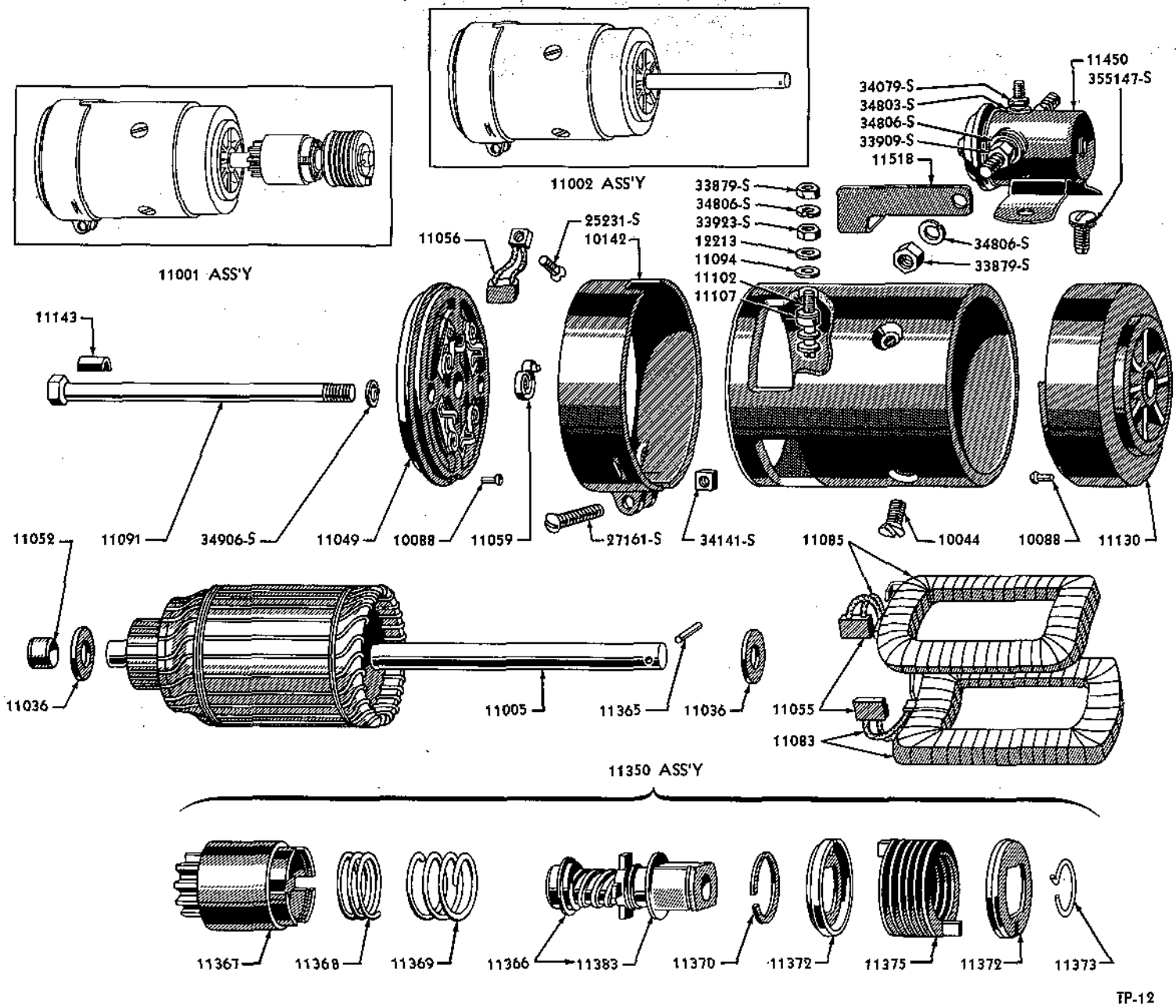

1948 STARTER, DRIVE AND SOLENOID ASS'Y.

Basic numbers only shown on illustration. Order by Part Numbers shown in list of parts.

Ford

TRACTOR PARTS CATALOGUE

Starter and Drive

PART NUMBER	PART NAME	NO. REQ'D	MODEL	YEAR 19__
9N 11001	Starter and drive assy	1	9N, 9NAN, 2N, 2NAN	39-47
8N 11001	Starter and drive assy	1	8N	48
9N 11002	Starter assy	1	9N, 9NAN, 2N, 2NAN	39-47
8N 11002	Starter assy	1	8N	48
	68-10044 Screw (starter pole piece)	4	9N, 9NAN, 2N, 2NAN, 8N	39-47
2N 11004	Cover (starter bore)	1	9NAN, 2NAN	39-47
52 11005	Armature assy (starter)	1	9N, 9NAN, 2N, 2NAN, 8N	39-48
18 11036	Washer (starter armature thrust)-front and rear	2	9N, 9NAN, 2N, 2NAN, 8N	39-48
18 11049	Plate assy (starter brush end)	1	9N, 9NAN, 2N, 2NAN, 8N	39-48
	18-10088 Dowel (starter end plate)	2	9N, 9NAN, 2N, 2NAN, 8N	39-48
	18-10142 Band (starter cover)	1	9N, 9NAN, 2N, 2NAN	39-47
	27161-S7 Screw (cover band)	1	9N, 9NAN, 2N, 2NAN, 8N	39-48
	34141-S7 Nut (cover band screw)-No.10-32	1	9N, 9NAN, 2N, 2NAN, 8N	39-48
18 11052	Bearing (starter brush end plate)	1	8N	48
18 11055	Brush assy (starter)-insulated	2	8N	48
18 11056	Brush assy (starter)-grounded	2	9N, 9NAN, 2N, 2NAN, 8N	39-48
	25231-S7 Screw (brush assy to frame)	2	9N, 9NAN, 2N, 2NAN, 8N	39-48
18 11057	Brushes (starter)-one set in carton-Consists of the following 2-18 11055 Brush 2-18 11056 Brush	1	9N, 9NAN, 2N, 2NAN, 8N	39-48
B 11059	Spring (starter brush)	4	9N, 9NAN, 2N, 2NAN, 8N	39-48
18 11083	Coil (starter field)-left	1	9N, 9NAN, 2N, 2NAN, 8N	39-48
18 11085	Coil (starter field)-right	1	9N, 9NAN, 2N, 2NAN, 8N	39-48
18 11091	Bolt (starter thru)	2	9N, 9NAN, 2N, 2NAN, 8N	39-48
	34906-S Lockwasher-5/16"	2	9N, 9NAN, 2N, 2NAN, 8N	39-48
18 11094-B	Washer (starter field terminal)	1	9N, 9NAN, 2N, 2NAN, 8N	39-48
18 11102-B	Terminal (starter field)	1	9N, 9NAN, 2N, 2NAN, 8N	39-48
	B-12213 Washer (starter terminal)	1	9N, 9NAN, 2N, 2NAN, 8N	39-48
	33879-S7 Nut (field terminal)-5/16"-24	1	9N, 9NAN, 2N, 2NAN, 8N	39-48
	34806-S7 Lockwasher (field terminal)	1	9N, 9NAN, 2N, 2NAN, 8N	39-48
	33923-S7 Nut-check-5/16"-24	1	9N, 9NAN, 2N, 2NAN, 8N	39-48
	351360-S7 Washer (starter cam screw)	1	9N, 9NAN, 2N, 2NAN, 8N	39-48
18 11107-B	Insulator (starter frame to coil)-inner	1	9N, 9NAN, 2N, 2NAN, 8N	39-48
8N 11113	Cover (starter switch terminal)	1	8N	48
8N 11115	Cover (starter control wire terminal)	1	8N	48
52 11130-A	Plate assy (starter rear end)	1	9N, 9NAN, 2N, 2NAN	39-47
8N 11130	Plate assy (starter rear end)	1	8N	48
18 11143	Spacer (starter motor)	2	8N	48
52 11350-C	Drive assy (starter)	1	9N, 9NAN, 2N, 2NAN, 8N	39-48
52 11365-B	Pin (starter pinion drive)	1	9N, 9NAN, 2N, 2NAN, 8N	39-48
52 11366-B	Screw and shaft assy (starter drive)	1	9N, 9NAN, 2N, 2NAN, 8N	39-48
52 11367	Pinion and barrel assy (starter drive)	1	9N, 9NAN, 2N, 2NAN, 8N	39-48
52 11368	Spring (starter drive meshing)	1	9N, 9NAN, 2N, 2NAN, 8N	39-48
52 11369	Spring (starter drive anti-drift)	1	9N, 9NAN, 2N, 2NAN, 8N	39-48
52 11370	Ring (starter drive pinion and barrel retaining)	1	9N, 9NAN, 2N, 2NAN, 8N	39-48
52 11372	Plate (starter spring anchor)	2	9N, 9NAN, 2N, 2NAN, 8N	39-48
52 11373	Ring (starter drive spring lock)	1	9N, 9NAN, 2N, 2NAN, 8N	39-48
52 11375	Spring (starter drive)	1	9N, 9NAN, 2N, 2NAN, 8N	39-48
52 11383	Spacer (starter drive)	1	9N, 9NAN, 2N, 2NAN, 8N	39-48
9N 11450-A	Switch assy (starter dash)-2.96" long x 2.38" O.D.	1	9N, 9NAN, 2N, 2NAN before Serial 12,500	39-47
9N 11450-B	Switch assy (starter dash)-3.40" long x 2" O.D.	1	9N, 9NAN, 2N, 2NAN after Serial 12,499	39-47
8N 11450	Switch assy (starter solenoid)	1	8N	48
	34806-S7 Lockwasher-5/16"	2	8N	48
	33909-S7 Nut (starter solenoid terminal)	2	8N	48
	34703-S7 Washer-No.10	1	8N	48
	34079-S7 Nut (starter solenoid top terminal)-No.10-32-hex	1	8N	48
	355147-S7 Screw (starter solenoid switch to starter)-No.10-32	2	8N	48

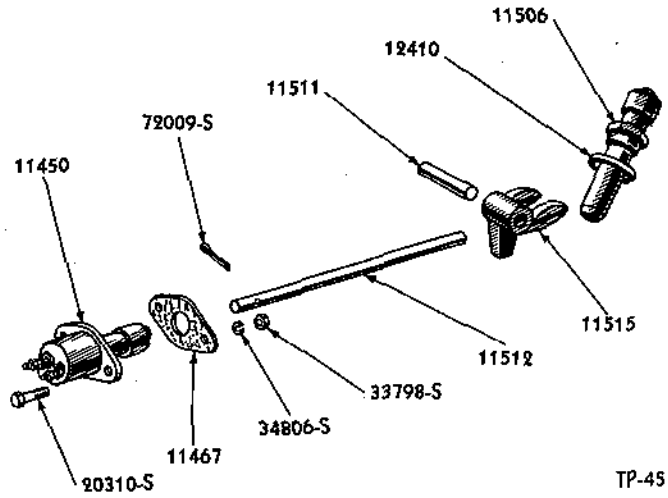

1941-47 STARTER SWITCH AND BUTTON

Basic numbers only shown on illustration. Order by Part Numbers shown in list of parts.

PART NUMBER	PART NAME	NO. REQ'D	MODEL	YEAR 19__
2N 11453	Cover (starter switch)	1	9NAN, 2NAN	39-47
	20310-S7 Bolt (cover to housing)	4	9NAN, 2NAN	39-47
	34806-S7 Lockwasher (cover to housing)	4	9NAN, 2NAN	39-47
	20310-S7 Bolt (starter switch to lower housing) -5/16"-18 x 1/2"	2	9N, 9NAN, 2N, 2NAN	39-47
	34806-S7 Lockwasher (starter switch to lower housing) -5/16"	2	9N, 9NAN, 2N, 2NAN	39-47
	33798-S7 Nut (starter switch post) - 5/16"-24	2	9N, 9NAN, 2N, 2NAN	39-47
	34806-S7 Lockwasher (starter switch post) -5/16"	2	9N, 9NAN, 2N, 2NAN, 8N	39-48
9N 11467	Gasket (starter switch)	1	9N, 9NAN, 2N, 2NAN after Serial 12,499	39-47
8N 11500	Switch assy (starter)	1	8N	48
	351217-S7 Lockwasher (starter switch) - external tooth	1	8N	48
	33949-S7 Nut (starter switch retaining)	1	8N	48
9N 11506	Button assy (starter switch)	1	9N, 9NAN, 2N, 2NAN after Serial 12,499	39-47
	8N-12410 Gasket (starter switch insulating)	1	8N	48
9N 11511	Rod (starter push lever)	1	9N, 9NAN, 2N, 2NAN after Serial 12,499	39-47
9N 11512	Rod (starter push)	1	9N, 9NAN, 2N, 2NAN after Serial 12,499	39-47
	72009-S Cotter pin (starter push rod) - 3/32" x 5/8"	1	9N, 9NAN, 2N, 2NAN	39-47
2N 11515	Lever (starter push)	1	9N, 9NAN, 2N, 2NAN after Serial 12,499	39-47
8N 11518	Bus (starter solenoid to starter)	1	8N	48
	34806-S7 Lockwasher (bus bar to starter) -5/16"	1	8N	48
	33879-S7 Nut (bus bar to starter) -5/16" - hex	1	8N	48
8N 11529	Gasket (starter switch to transmission cover)	1	8N	48
9N 11652	Switch and wiring assy (lighting)	1	9N, 9NAN, 2N, 2NAN	39-47
	351001-S7 Nut (switch to panel)	1	9N, 9NAN, 2N, 2NAN	39-47
	9N-9703 Knob (light switch) -used with 9N-18438-B lighting kit	1	9N, 9NAN, 2N, 2NAN	39-47
9N 11653-B	Wiring (lighting kit)	1	9N, 9NAN, 2N, 2NAN	39-47
9N 11664	Plug (light switch hole) -rubber-3/8"		Refer to Steering Gear & Instrument Panel Group	

Ford

TRACTOR PARTS CATALOGUE

PART NUMBER		PART NAME	NO. REQ'D.	MODEL	YEAR 19____

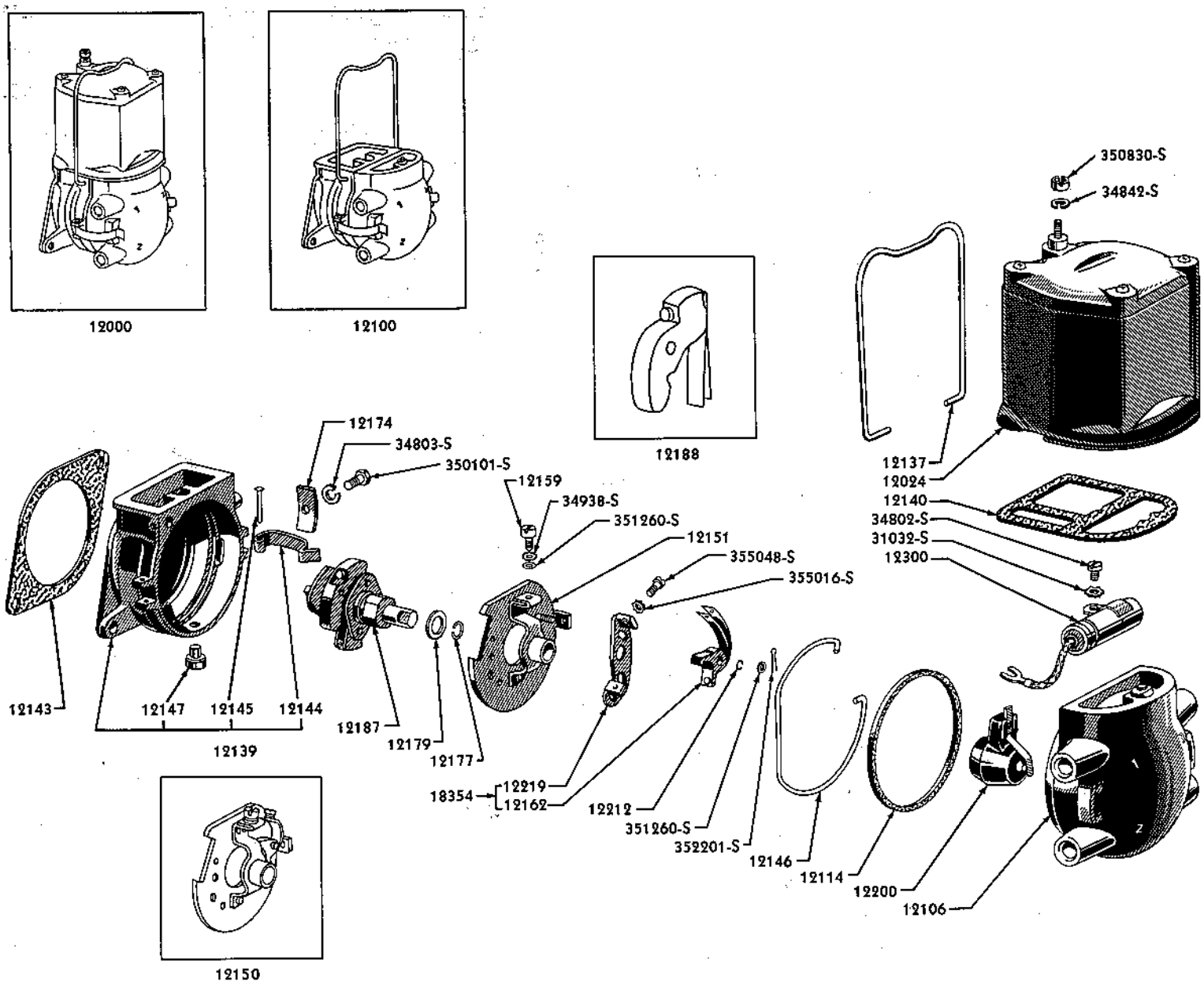

1939-48 DISTRIBUTOR AND COIL ASS'Y.

Basic numbers only shown on illustration. Order by Part Numbers shown in list of parts.

Ford

TRACTOR PARTS CATALOGUE

Distributor and Coil

PART NUMBER	PART NAME	NO. REQ'D	MODEL	YEAR 19__
9N 12000	Distributor and coil assy	1	9N, 9NAN, 2N, 2NAN, 8N	39-48
9N 12024	Coil assy (ignition)	1	9N, 9NAN, 2N, 2NAN, 8N	39-48
	350830-S7 Nut (primary post)-No.8	1	9N, 9NAN, 2N, 2NAN, 8N	39-48
	34842-S7 Lockwasher (primary post nut)-No.8	1	9N, 9NAN, 2N, 2NAN, 8N	39-48
9N 12100	Distributor assy-less coil	1	9N, 9NAN, 2N, 2NAN, 8N	39-48
9N 12106-B	Housing (distributor terminal)	1	9N, 9NAN, 2N, 2NAN, 8N	39-48
	31032-S7 Lockwasher (condenser bracket to distributor base)-No.8	1	9N, 9NAN, 2N, 2NAN, 8N	39-48
	34802-S7 Screw (condenser bracket to distributor base)-No.8	1	9N, 9NAN, 2N, 2NAN, 8N	39-48
9N 12112	Conduit (spark plug wiring)-for battery ignition	1	9N, 9NAN, 2N, 2NAN	39-47
2N 12112	Conduit (spark plug wiring)-for magneto conversion	1	9N, 9NAN, 2N, 2NAN	39-48
8N 12112	Conduit (spark plug wiring)	1	8N	48
9N 12113-A	Insulator (distributor spark plug wire)	4	9N, 9NAN	39-42
2N 12113	Insulator (distributor spark plug wire)	4	2N, 2NAN, 8N	42-48
91A 12114	Gasket (distributor terminal housing to base)	1	9N, 9NAN, 2N, 2NAN, 8N	39-48
9N 12137	Bail (distributor coil)	1	9N, 9NAN, 2N, 2NAN, 8N	39-48
9N 12139	Base and clamp assy (distributor)	1	9N, 9NAN, 2N, 2NAN, 8N	39-48
91A 12140	Gasket (distributor coil)	1	9N, 9NAN, 2N, 2NAN, 8N	39-48
9N 12143	Gasket (distributor base)	1	9N, 9NAN, 2N, 2NAN, 8N	39-48
9N 12143	Gasket (magneto lower housing)		Refer to Magneto Group	
9N 12144	Clamp (distributor terminal housing to base)	2	9N, 9NAN, 2N, 2NAN, 8N	39-48
B 12145	Rivet (distributor clamp)	2	9N, 9NAN, 2N, 2NAN, 8N	39-48
91A 12146	Spring (distributor base)	1	9N, 9NAN, 2N, 2NAN, 8N	39-48
9N 12147	Cap (distributor vent)	2	9N, 9NAN, 2N, 2NAN, 8N	39-48
48 12148	Screw (distributor to front cover)	2	9N, 9NAN, 2N, 2NAN, 8N	39-48
48 12148	Screw (magneto to engine)		Refer to 2N-12500-A	
9N 12150	Breaker assy (distributor)	1	9N, 9NAN, 2N, 2NAN, 8N	39-48
	355048-S7 Screw and lockwasher assy (breaker spring conductor to contact bracket)-No.8-32	2	9N, 9NAN, 2N, 2NAN, 8N	39-48
	355016-S7 Screw and washer assy (breaker spring conductor to contact bracket)-No.6-32	1	9N, 9NAN, 2N, 2NAN, 8N	39-48
9N 12151	Plate assy (distributor breaker)	1	9N, 9NAN, 2N, 2NAN, 8N	39-48
91A 12159	Screw (condenser primary contact)	1	9N, 9NAN, 2N, 2NAN, 8N	39-48
9N 12162	Arm assy (distributor breaker)	1	9N, 9NAN, 2N, 2NAN, 8N	39-48
	351260-S Washer (breaker arm to post)-.188" I.D. x .312" O.D. x .02"-brass	1	9N, 9NAN, 2N, 2NAN, 8N	39-48
	352201-S Cotter pin (breaker arm to post)-3/64" x .31"	1	9N, 9NAN, 2N, 2NAN, 8N	39-48

Ford

TRACTOR PARTS CATALOGUE

PART NUMBER	PART NAME	NO. REQ'D	MODEL	YEAR 19__
91A 12174	Washer (distributor breaker adjustment screw)	1	9N, 9NAN, 2N, 2NAN, 8N	39-48
	34803-S7 Lockwasher (breaker adjustment) -No. 10	1	9N, 9NAN, 2N, 2NAN, 8N	39-48
	350101-S7 Screw (breaker adjustment)- No. 10-32 x 1/2"	1	9N, 9NAN, 2N, 2NAN, 8N	39-48
91A 12177	Retainer (distributor cam)	1	9N, 9NAN, 2N, 2NAN, 8N	39-48
91A 12179	Washer (distributor cam retainer)-I.D. .43"-O.D. .75"	1	9N, 9NAN, 2N, 2NAN, 8N	39-48
59A 12182-A	Screw and lockwasher assy (distributor)	1	9N, 9NAN, 2N, 2NAN, 8N	39-48
9N 12187	Shaft, cam and weights assy (distributor)	1	9N, 9NAN, 2N, 2NAN, 8N	39-48
9N 12188	Weight assy (distributor)	2	9N, 9NAN, 2N, 2NAN, 8N	39-48
9N 12200	Rotor assy (distributor)	1	9N, 9NAN, 2N, 2NAN, 8N	39-48
91A 12212	Retainer (distributor weight)	2	9N, 9NAN, 2N, 2NAN, 8N	39-48
B 12213	Washer (valve chamber cover)		Refer to Engine Group	
B 12213	Washer (starter terminal)		Refer to Starter & Drive Group	
68 12219	Bracket assy (distributor contact)	1	9N, 9NAN, 2N, 2NAN, 8N	39-48
	9N-18354 Kit (distributor point)-Consists of the following 1-9N 12162 Arm 1-68 12219 Contact	1	9N, 9NAN, 2N, 2NAN, 8N	39-48
8N 12250	Resistor assy (ignition coil)	1	9N, 9NAN, 2N, 2NAN, 8N	39-48
	24626-S7 Screw (resistor to dash)-5/16"-18 x 7/16"	2	9N, 9NAN, 2N, 2NAN, 8N	39-48
9N 12276	Cover (distributor breaker)	1	9N, 9NAN, 2N, 2NAN, 8N	39-48

Ignition Wiring

9N 12278	Insulator (spark plug wire)	2	9N, 9NAN, 2N, 2NAN	39-47
2N 12281-A	Conduit and wiring assy (magneto to spark plug)	1	2N, 2NAN	42-47
2N 12281-B	Conduit and wire assy (distributor to spark plug)- use with ignition lock 2N-3679	1	9N, 9NAN, 2N, 2NAN	39-47
8N 12281	Conduit and wire assy (distributor to spark plug)	1	8N	48
2N 12282	Wire assy (magneto to spark plug No.3)-21.75" long-green tracer	1	9N, 9NAN, 2N, 2NAN	39-47
8N 12283	Wire assy (distributor to spark plug No.3)-27.50" long-black insulation with green "X" tracer	1	9N, 9NAN, 2N, 2NAN, 8N	39-48
2N 12284	Wire assy (magneto to spark plug No.2)-17.50" long-blue tracer	1	9N, 9NAN, 2N, 2NAN	39-47
8N 12284	Wire assy (distributor to spark plug No.2)-24.50" long-black insulation with blue "X" tracer	1	9N, 9NAN, 2N, 2NAN, 8N	39-48
2N 12286	Wire assy (magneto to spark plug No.4)-27.00" long-yellow tracer	1	9N, 9NAN, 2N, 2NAN	39-47
8N 12286	Wire assy (distributor to spark plug No.4)-33.00" long-black insulation with yellow "X" tracer	1	9N, 9NAN, 2N, 2NAN, 8N	39-48
9N 12287-A	Wire assy (distributor to spark plug No.1)-21.50" long-black insulation with red "X" tracer	1	9N, 9NAN, 2N, 2NAN	39-47
2N 12287	Wire assy (magneto to spark plug No.1)-14.50" long-red tracer	1	9N, 9NAN, 2N, 2NAN	39-47
8N 12287	Wire assy (distributor to spark plug No.1)- 17.50" long-black with red "X" tracer	1	8N	48
91A 12300	Condenser assy	1	9N, 9NAN, 2N, 2NAN, 8N	39-48
	34938-S7 Lockwasher (condenser wire to front bearing bracket)-No. 8	1	9N, 9NAN, 2N, 2NAN, 8N	39-48
	351260-S Washer-No. 8-brass	1	9N, 9NAN, 2N, 2NAN, 8N	39-48
9N 12405	Spark plug (type H-10)	4	9N, 9NAN, 2N, 2NAN, 8N	39-48
9NANF 12405	Spark plug	4	9NAN, 2NAN	39-47
B 12410	Gasket (starter button to housing)	1	9N, 9NAN, 2N, 2NAN after Serial 12,499	39-47
01A 12410-A	Gasket (spark plug)	4	9N, 9NAN, 2N, 2NAN, 8N	39-48
8N 12410	Gasket (starter switch insulating)		Refer to Starter & Drive Group	
2N 12426	Adapter (spark plug)	4	9N, 9NAN, 2N, 2NAN, 8N	39-48

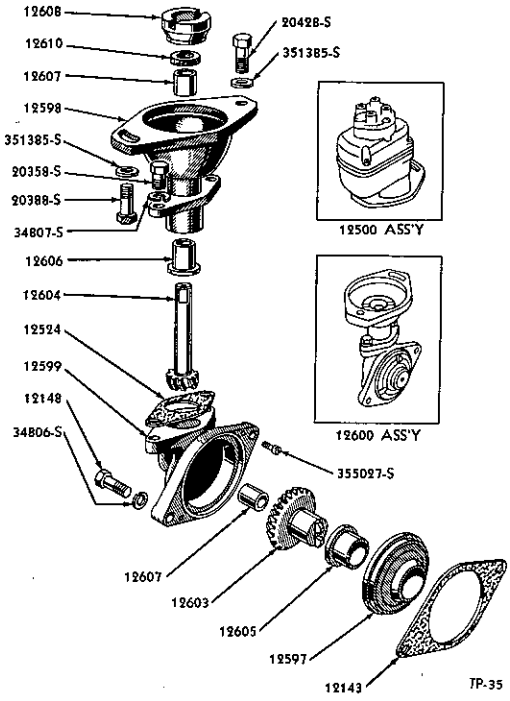

1939-48 MAGNETO AND DRIVE ASS'Y.

Basic numbers only shown on illustration. Order by Part Numbers shown in list of parts.

PART NUMBER	PART NAME	NO. REQ'D	MODEL	YEAR 19____
	Magneto			
2N 12500-A	Magneto assy (complete)	1	2N,2NAN	43-47
2N 12524	Gasket (magneto drive)	1	2N,2NAN	43-47
	48-12148 Bolt (magneto to engine front)	2	2N,2NAN	43-47
	34806-S7 Lockwasher	2	2N,2NAN	43-47
2N 12597	Plate assy (magneto drive adapter)	1	2N,2NAN	43-47
2N 12598	Housing assy (upper magneto drive)	1	2N,2NAN	43-47
	20388-S2 Bolt (magneto to upper magneto drive housing)	1	2N,2NAN	43-47
	20428-S Bolt (magneto to upper magneto drive housing)	1	2N,2NAN	43-47
	351385-S Washer (magneto to upper magneto drive housing)-flat	2	2N,2NAN	43-47
2N 12599	Housing assy (lower magneto drive)	1	2N,2NAN	43-47
	9N-12143 Gasket (magneto lower housing)	1	2N,2NAN	43-47
	20358-S Bolt (upper to lower magneto drive housing)	2	2N,2NAN	43-47
	34807-S Lockwasher (upper to lower magneto drive housing)	2	2N,2NAN	43-47
	355027-S Screw (lower magneto drive housing)-fillister head	2	2N,2NAN	43-47
2N 12600	Drive assy (magneto)	1	2N,2NAN	43-47
2N 12603	Gear assy (magneto drive drive)	1	2N,2NAN	43-47
2N 12604	Gear (magneto drive driven)	1	2N,2NAN	43-47
2N 12605	Bushing (lower magneto drive flange)	1	2N,2NAN	43-47
2N 12606	Bushing (upper magneto drive flange)	1	2N,2NAN	43-47
2N 12607	Bushing (magneto drive upper drive shaft)	1	2N,2NAN	43-47
2N 12607	Bushing (magneto drive lower drive shaft)	1	2N,2NAN	43-47
2N 12608	Coupling (magneto drive)	1	2N,2NAN	43-47
2N 12610	Wick (magneto drive oil reservoir)	1	2N,2NAN	43-47

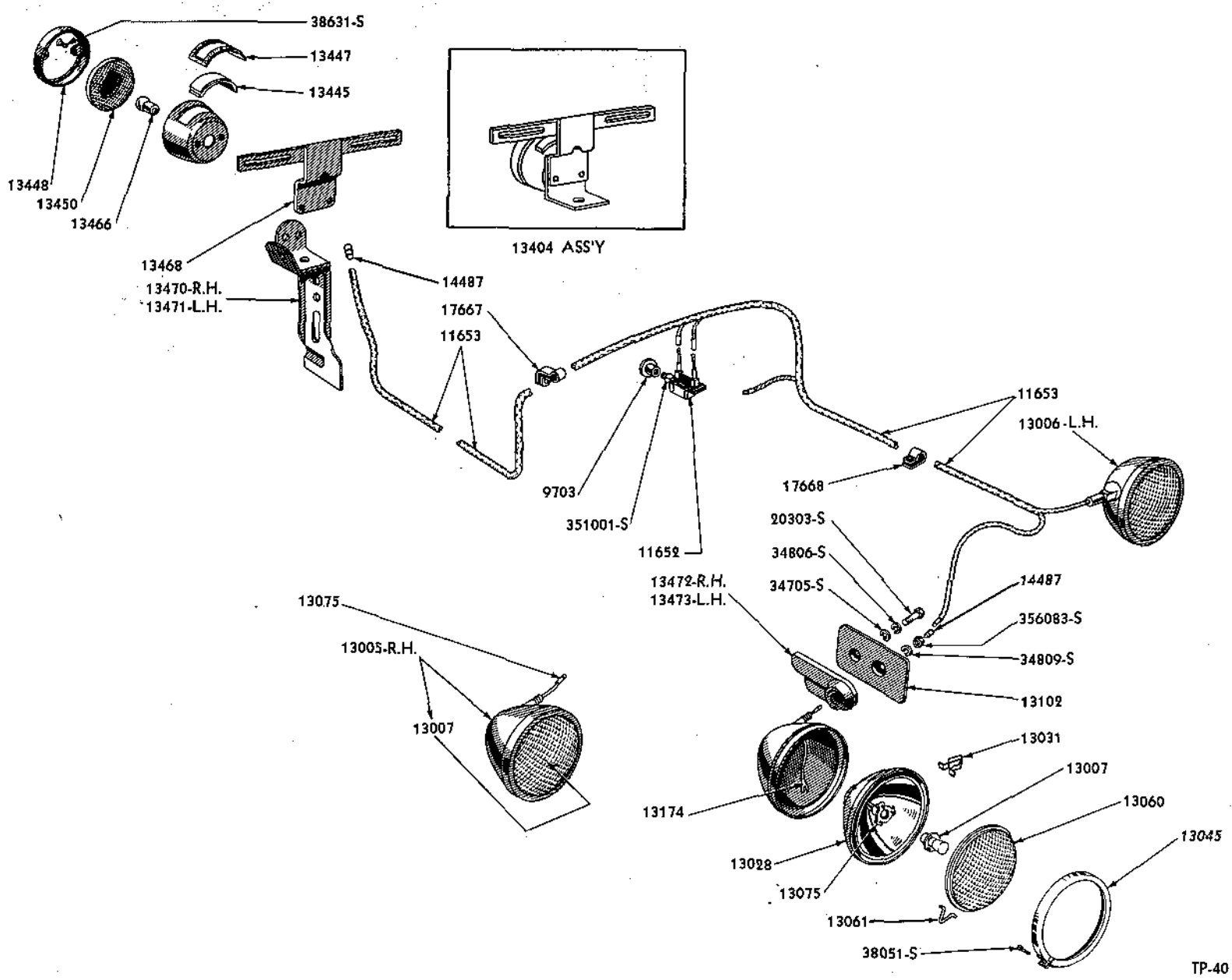

1939-47 LIGHTING KIT AND WIRING ASS'Y.

Basic numbers only shown on illustration. Order by Part Numbers shown in list of parts.

Ford

TRACTOR PARTS CATALOGUE

PART NUMBER	PART NAME	NO. REQ'D	MODEL	YEAR 19__
	Lamps			
2N 13005-C	Headlamp assy-RH	1	9N, 9NAN, 2N, 2NAN	39-47
2N 13006-C	Headlamp assy-LH	1	9N, 9NAN, 2N, 2NAN	39-47
	356083-S7 Nut (headlamp to side panel)	2	9N, 9NAN, 2N, 2NAN	39-47
	34809-S7 Lockwasher (headlamp to side panel)	2	9N, 9NAN, 2N, 2NAN	39-47
	9N-18438-B Kit (lighting)-Consists of the following 1-9N 9703 Knob; 1-9N 11652 Switch 1-9N 11653-B Wiring; 1-2N 13005-C Headlamp 1-2N 13006-C Headlamp; 2-9N 13102 Reinf. 1-9N 13404 Lamp; 1-9N 13470 Bracket 1-9N 13471 Bracket; 1-2N 13472 Medallion 1-2N 13473 Medallion; 1- B 14526 Fuse 2- B 14585 Clip; 5- B 14586 Clip 3-9N 17667 Clip; 9-9N 17668 Clip 4- 34806-S7 Lockwasher; 2- 34809-S7 Lockwasher 2- 20303-S7 Bolt; 1- 351001-S7 Nut 2- 356083-S7 Nut	1	9N, 9NAN, 2N, 2NAN	39-47
9N 13007	Bulb (headlamp)	2	9N, 9NAN, 2N, 2NAN	39-47
2N 13007-C	Bulb (headlamp)-sealed beam	2	9N, 9NAN, 2N, 2NAN	39-47
9N 13028	Reflector (headlamp)	2	9N, 9NAN, 2N, 2NAN	39-47
9N 13031	Spring (headlamp reflector retaining)	2	9N, 9NAN	39-43
9N 13045	Door (headlamp)	2	9N, 9NAN, 2N, 2NAN	39-47
	38051-S Screw (headlamp door)-No.8-32 x 1/2"	2	9N, 9NAN, 2N, 2NAN	39-47
9N 13060	Lens (headlamp)	2	9N, 9NAN	39-43
9N 13061	Spring (headlamp lens retaining)	2	9N, 9NAN	39-43
9N 13075	Socket and wire assy (headlamp)	2	9N, 9NAN	39-43
2N 13075	Socket and wire assy (headlamp)	2	2N, 2NAN	43-47
	9N-17667 Clip (headlamp)	3	9N, 9NAN, 2N, 2NAN	39-47
	9N-17668 Clip (headlamp)	9	9N, 9NAN, 2N, 2NAN	39-47
9N 13102	Reinforcement (headlamp bracket)	2	9N, 9NAN, 2N, 2NAN	39-47
2N 13174	Wire (headlamp ground)	2	9N, 9NAN, 2N, 2NAN	39-47
M 13243	Enamel (medium gray)-air dry		Refer to Paints Group	
9N 13404	Lamp and bracket assy (rear)	1	9N, 9NAN, 2N, 2NAN	39-47
9N 13445	Lens (rear lamp)-white-license identification	1	9N, 9NAN, 2N, 2NAN	39-47
9N 13447	Gasket (rear lamp white lens)	1	9N, 9NAN, 2N, 2NAN	39-47
9N 13448	Door (rear lamp)	1	9N, 9NAN, 2N, 2NAN	39-47
	38631-S13 Screw (rear lamp door)-No.6-32 x 1/2"	2	9N, 9NAN, 2N, 2NAN	39-47
9N 13450	Lens (rear lamp)-red warning	1	9N, 9NAN, 2N, 2NAN	39-47
B 13466	Bulb (rear lamp)	1	9N, 9NAN, 2N, 2NAN	39-47
9N 13468	Bracket (rear lamp)	1	9N, 9NAN, 2N, 2NAN	39-47
9N 13470	Bracket (fender lamp)-RH	1	9N, 9NAN, 2N, 2NAN	39-47
9N 13471	Bracket (fender lamp)-LH	1	9N, 9NAN, 2N, 2NAN	39-47
2N 13472-A	Medallion (headlamp mounting)-RH	1	9N, 9NAN, 2N, 2NAN	39-47
2N 13473-A	Medallion (headlamp mounting)-LH	1	9N, 9NAN, 2N, 2NAN	39-47
	20301-S7 Bolt (medallion to side panel)-1/4"-28 x 3/8"-hex head	2	9N, 9NAN, 2N, 2NAN	39-47
	20303-S7 Bolt (medallion to side panel)-5/16"-24 x 3/8"-hex head	2	9N, 9NAN, 2N, 2NAN	39-47
	34806-S7 Lockwasher (medallion to side panel)-5/16"	2	9N, 9NAN, 2N, 2NAN	39-47
	34705-S7 Washer (medallion to side panel)-1/4"-flat	2	9N, 9NAN, 2N, 2NAN	39-47
51C 14197	Clip (electric wiring to instrument panel support bracket)	1	8N	48

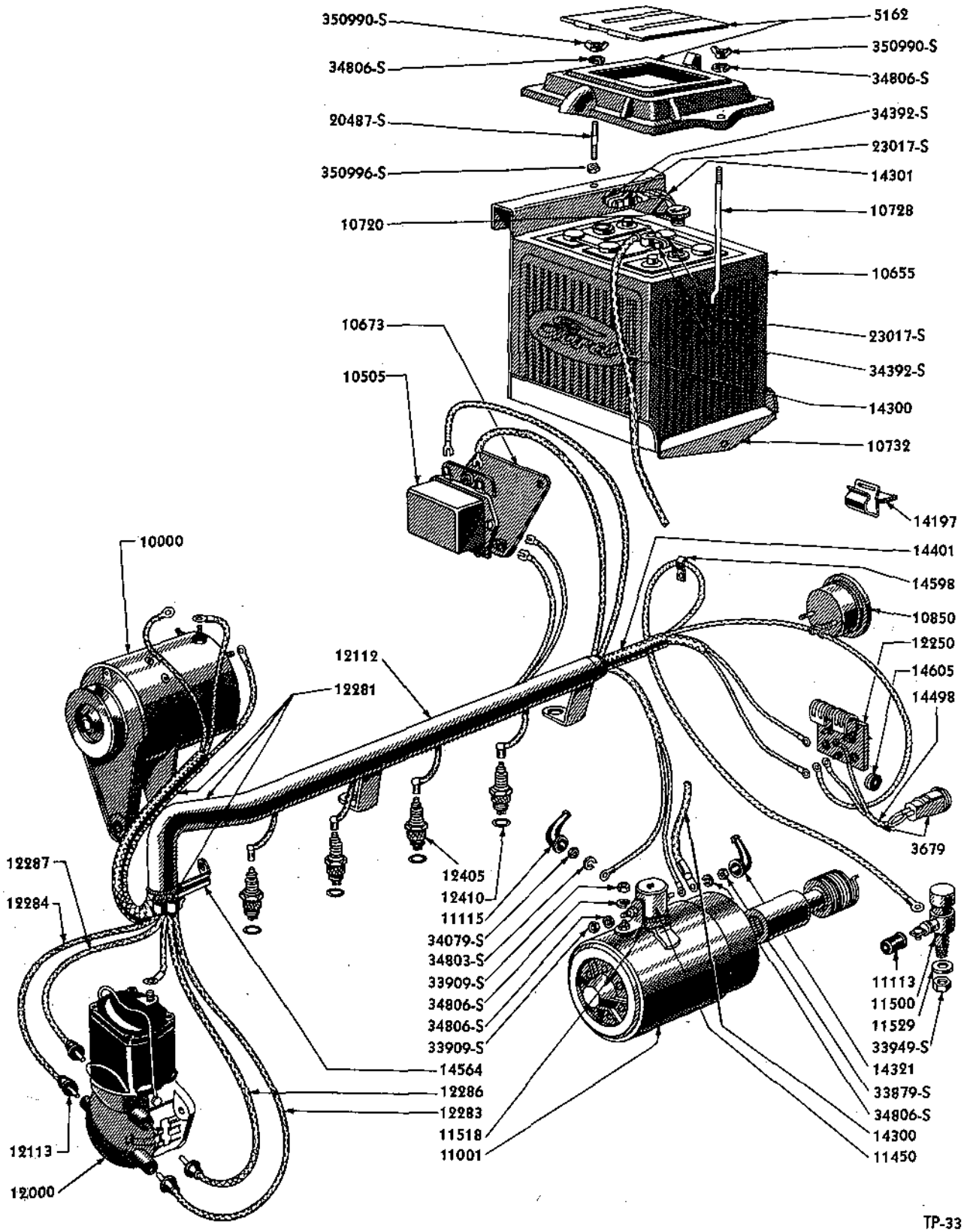

1948 ELECTRICAL WIRING AND RELATED PARTS

Basic numbers only shown on illustration. Order by Part Numbers shown in list of parts.

Ford

TRACTOR PARTS CATALOGUE

PART NUMBER	PART NAME	NO. REQ'D	MODEL	YEAR 19___
	Battery Cables			
9N 14300-A	Cable assy (battery to starter switch)-18.25"	1	9N, 9NAN before Serial 12,500	39-41
9N 14300-C	Cable assy (battery to starter switch)-20"	1	9N, 9NAN, 2N, 2NAN after Serial 12,499	39-47
	23017-S16 Bolt (starter switch cable terminal to battery post)-5/16"-18 x 1-1/4"-square head	1	9N, 9NAN, 2N, 2NAN	39-47
	33797-S16 Nut (terminal bolt)-5/16"-18	1	9N, 9NAN, 2N, 2NAN	39-47
8N 14300	Cable assy (battery to starter solenoid)-10 1/2"	1	8N	48
	33879-S7 Nut (cable to solenoid)-5/16"	1	8N	48
	34806-S7 Lockwasher (cable to solenoid)-5/16"	1	8N	48
9N 14301	Strap assy (battery to ground)-5 1/2"	1	9N, 9NAN, 2N, 2NAN	39-47
8N 14301	Strap assy (battery to ground)-9.75"	1	8N	48
	23017-S16 Bolt (ground terminal to battery post)-5/16"-18 x 1-1/4"	1	9N, 9NAN, 2N, 2NAN, 8N	39-48
	34392-S16 Locknut (battery ground terminal)-5/16"-18-hex	1	8N	48
	33797-S16 Nut (terminal bolt)-5/16"-18	1	9N, 9NAN, 2N, 2NAN	39-47
86H 14321	Cover (starter cable terminal)-rubber	1	8N	48
9N 14377	Connector assy (ignition switch to resistor)	1	9N, 9NAN, 2N, 2NAN	39-43
	Ignition Wiring			
9N 14401-B	Wiring assy (main)-less conduit and spark plug wires	1	9N, 9NAN, 2N, 2NAN	39-43
9N 14401-C	Wiring assy (main)-less conduit and spark plug wires -with 10 connecting wires extending from rear of harness	1	9N, 9NAN, 2N, 2NAN	39-43
	9N-2279 Clip (wiring)-for tractors having ignition switch on RH side of instrument panel	1	9N, 9NAN, 2N, 2NAN	39-43
2N 14401	Wiring assy (main)-less conduit and spark plug wires -with 6 connecting wires extending from rear of harness	1	2N, 2NAN	43-47
8N 14401	Wiring assy (main)-less conduit and spark plug wires -contains 14 terminals	1	8N	48
9N 14431-A	Cable assy (switch to starter)-25.75" long with 1 90° connector and 1 straight connector	1	9N, 9NAN before Serial 12,500	39-42
9N 14431-B	Cable assy (switch to starter)-13.00" long-straight connectors	1	9N, 9NAN, 2N, 2NAN after Serial 12,499	39-47
68 14487	Connector assy (headlamp)	2	9N, 9NAN	39-42
9N 14487	Connector assy (headlamp)	2	2N, 2NAN, 8N	43-48
9N 14498	Wire assy (ignition switch to junction terminal and coil)-10" long	1	9N, 9NAN, 2N, 2NAN	39-47
2N 14498	Wire assy (ignition switch to junction terminal and coil)-12" long	1	2N, 2NAN	42-47
8N 14498	Wiring assy (ignition lock)	1	8N	48
51 14550-A	Support (starter cable)	1	9N, 9NAN, 2N, 2NAN	39-47
9N 14564	Bracket (spark plug wire)	1	9N, 9NAN, 2N, 2NAN, 8N	39-48
B 14585	Clip (headlamp)	as reqd	9N, 9NAN, 2N, 2NAN	39-47
B 14586	Clip (headlamp)	as reqd	9N, 9NAN, 2N, 2NAN	39-47
11A 14598	Clip (8N-14401 to battery bracket)	2	8N	48
11A 14605-A	Grommet (starter switch lead thru lower instrument panel)-rubber	1	8N	48

Ford

TRACTOR PARTS CATALOGUE

PART NUMBER		PART NAME	NO. REQ'D	MODEL	YEAR 19____

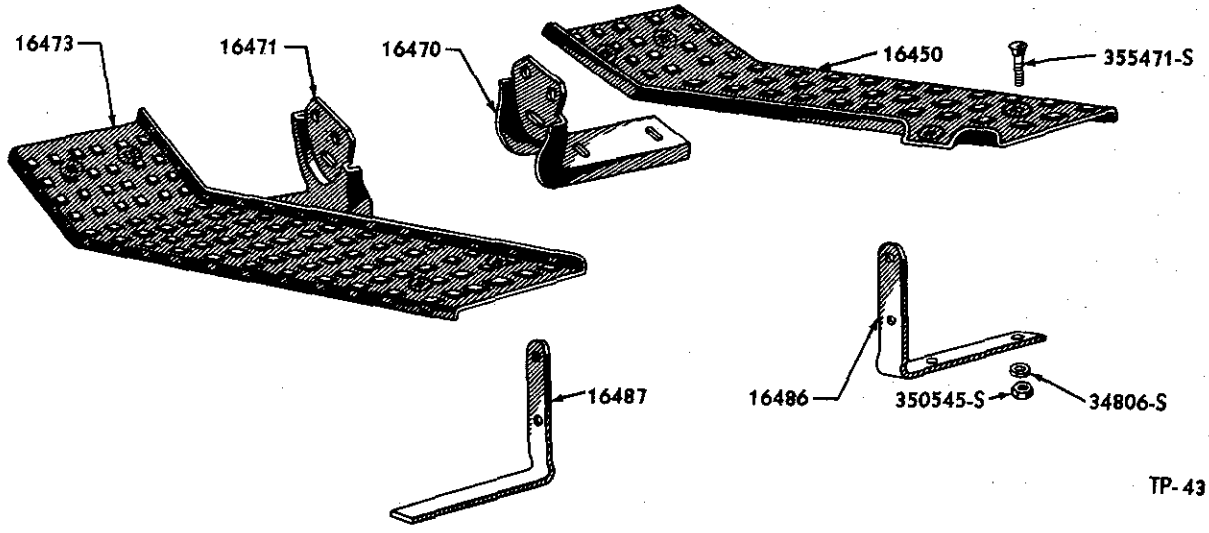

1948 RUNNING BOARDS AND SUPPORTS

Basic numbers only shown on illustration. Order by Part Numbers shown in list of parts.

PART NUMBER	PART NAME		NO. REQ'D	MODEL	YEAR 19—
	Running Boards and Fenders				
9N 16312	Fender assy-rear		2	9N, 9NAN, 2N, 2NAN, 8N	39-48
	22185-S7	Bolt (fender bracket to rear axle housing)-5/8"-18 x 5.56" -hex head	4	9N, 9NAN, 2N, 2NAN, 8N	39-48
	33806-S34	Nut (fender bracket to rear axle housing)-5/8"-18-hex	4	9N, 9NAN, 2N, 2NAN, 8N	39-48
	351500-S7	Lockwasher (fender bracket to rear axle housing)-5/8"	4	9N, 9NAN, 2N, 2NAN, 8N	39-48
8N 16450	Board assy (running)-RH		1	8N	48
8N 16470	Bracket (running board)-front-RH		2	8N	48
8N 16471	Bracket (running board)-front-LH		1	8N	48
8N 16473	Board assy (running)-LH		1	8N	48
	355471-S7	Bolt (running board to front & rear brackets)	8	8N	48
	34806-S7	Lockwasher (running board to front & rear brackets)	8	8N	48
	350545-S7	Nut (running board to front & rear brackets)-3/8"-24 x 1.5"	8	8N	48
8N 16486	Support (running board)-rear-RH		1	8N	48
8N 16487	Support (running board)-rear-LH		1	8N	48

Ford

TRACTOR PARTS CATALOGUE

Hood Top and Side Panels

PART NUMBER	PART NAME	NO. REQ'D	MODEL	YEAR 19__
2N 16600	Plate (identification)-"Ford"	1	9N,9NAN,2N,2NAN	39-47
8N 16600	Plate (identification)-"Ford"	1	8N	48
	350836-AS7 Nut (identification plate to hood top)-.18 speed	1	8N	48
9N 16612-B	Hood assy-top	1	9N, 9NAN	39-42
9N 16612-C	Hood assy-top	1	2N,2NAN	42-47
	355472-S7 Bolt (instrument panel to hood) -5/16"-24 x .56"	4	9N, 9NAN, 2N, 2NAN	39-47
	34806-S7 Lockwasher (instrument panel to hood)-5/16"	4	9N, 9NAN, 2N, 2NAN	39-47
	33798-S7 Nut (instrument panel to hood)-5/16"-24	4	9N, 9NAN, 2N, 2NAN	39-47
8N 16612	Hood assy-top	1	8N	48
9N 16618	Panel assy (hood side)-RH	1	9N,9NAN	39-43
2N 16618	Panel assy (hood side)-RH	1	2N,2NAN,8N	42-48
9N 16619	Panel assy (hood side)-LH	1	9N,9NAN	39-43
2N 16619	Panel assy (hood side)-LH	1	2N,2NAN,8N	42-48
	20311-S7 Bolt (hood top to side panel)-5/16"-24 x 1/2"	4	9N, 9NAN, 2N, 2NAN, 8N	39-48
	33798-S7 Nut (hood top to side panel)-5/16"-24	4	9N, 9NAN, 2N, 2NAN, 8N	39-48
	34806-S7 Lockwasher (hood top to side panel)-5/16"	4	9N, 9NAN, 2N, 2NAN, 8N	39-48
	350782-S7 Bolt (side panel to axle support) -7/16"-20 x .88"	4	9N, 9NAN, 2N, 2NAN, 8N	39-48
	34708-S7 Washer (side panel to axle support)-7/16"	2	9N, 9NAN, 2N, 2NAN, 8N	39-48
	356034-S7 Nut (side panel to axle support)-7/16"-20	2	9N, 9NAN, 2N, 2NAN, 8N, 8NAN	39-48
	350023-S Bolt (hood side panel assy to grill assy)	2	9N,9NAN,2N,2NAN	39-47
9N 16625	Handle and stud assy (hood top battery cover)	1	9N,9NAN,2N,2NAN,8N	39-48
	60882-S Rivet (spring to cover)-use with 9N-16938-B and D	8	9N, 9NAN, 2N, 2NAN, 8N	39-48
9N 16651	Retainer (battery cover hinge)	1	9N, 9NAN, 2N, 2NAN, 8N	39-48
9N 16656	Tongue (hood top battery cover)	1	9N, 9NAN, 2N, 2NAN, 8N	39-48
	33795-S7 Nut (hood top battery cover stud to tongue)-1/4"-20	1	9N, 9NAN, 2N, 2NAN, 8N	39-48
	34805-S7 Lockwasher (hood top battery cover stud to tongue)-1/4"	1	9N, 9NAN, 2N, 2NAN, 8N	39-48
9N 16689	Hinge (hood top battery cover)	1	2N, 2NAN, 8N	42-48
	63345-S7 Rivet (hinge to retainer)-tubular-7/16" x 3/16"	2	2N, 2NAN, 8N	42-48
	60894-S7 Rivet (hinge to cover and retainer to hood)-3/16" x 5/16"	4	2N, 2NAN, 8N	42-48
9N 16938-B	Cover assy (hood top battery)-cast	1	9N,9NAN	39-42
9N 16938-C	Cover assy (hood top battery)	1	2N,2NAN,8N	42-48
9N 16938-D	Cover assy (hood top battery)-use with 9N-16612-B	1	9N, 9NAN	39-42
9N 16948-B	Spring (battery opening cover)-use with 9N-16938-B and D	4	9N, 9NAN	39-42

Ford

TRACTOR PARTS CATALOGUE

Tools

PART NUMBER	PART NAME	NO. REQ'D	MODEL	YEAR 19—
9N 17004	Kit (tool)-Consists of the following 1- B 17005-A Bag 1-01A 17015 Wrench 1-01A 17016 Wrench 1- B 17020 Screw Driver 1- B 17025-A Pliers	1	9N, 9NAN, 2N, 2NAN, 8N	39-48
B 17005-A	Bag (tool)	1	9N, 9NAN, 2N, 2NAN, 8N	39-48
9N 17005-B	Box assy (tool)	1	2N, 2NAN	42-47
8N 17005	Box assy (tool)	1	8N	48
	39075-S7 Screw (tool box to tractor)-5/16"-24 x 5/8"-binding head-pointed	2	8N	48
	34746-S7 Washer (tool box to tractor)-5/16" flat	2	8N	48
9N 17014	Wrench (open end)-11/16" & 1"	1	9N, 9NAN, 2N, 2NAN, 8N	39-48
01A 17015	Wrench (open end)-7/16" & 1/2"	1	9N, 9NAN, 2N, 2NAN, 8N	39-48
01A 17016	Wrench (open end)-9/16" & 5/8"	1	9N, 9NAN, 2N, 2NAN, 8N	39-48
01A 17017-B	Wrench (spark plug and cylinder head)	1	9N, 9NAN, 2N, 2NAN, 8N	39-48
B 17020	Driver (screw)	1	9N, 9NAN, 2N, 2NAN, 8N	39-48
01A 17021-A	Wrench-adjustable	1	9N, 9NAN, 2N, 2NAN, 8N	39-48
B 17025-A	Pliers	1	9N, 9NAN, 2N, 2NAN, 8N	39-48
9N 17040	Crank (starting)-25.22" long	1	9N, 9NAN, 2N, 2NAN, 8N	39-48
2N 17040	Crank (starting)-24.84" long	1	2N, 2NAN	43-47
9N 17049	Cover (storm)	1	9N, 9NAN, 2N, 2NAN, 8N	39-48
9N 17052	Pump (tire)-power		Refer to Miscellaneous Kits & Accessories	
9N 17078	Jack assy-base & handle	1	9N, 9NAN, 2N, 2NAN, 8N	39-48
2N 17128-A	Adapter (grease gun)	1	9N, 9NAN, 2N, 2NAN, 8N	39-48
9N 17667	Clip (headlamp)-1.36" x .90" x 1"		Refer to Headlamp Group	
9N 17668	Clip (headlamp)		Refer to Headlamp Group	

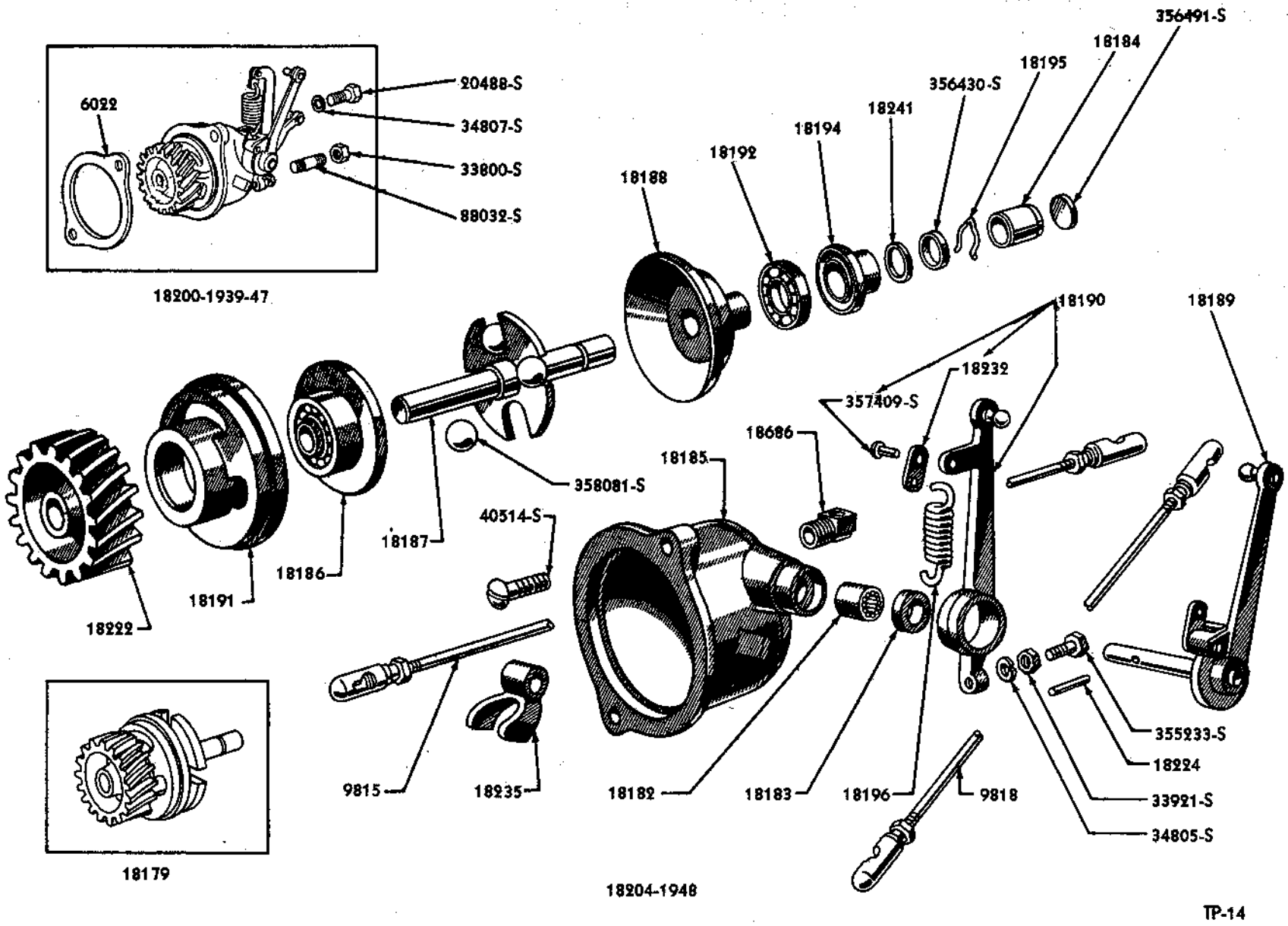

1948 GOVERNOR AND RELATED PARTS

Basic numbers only shown on illustration. Order by Part Numbers shown in list of parts.

Ford

TRACTOR PARTS CATALOGUE

Governor

PART NUMBER	PART NAME	NO. REQ'D	MODEL	YEAR 19___
9N 18179-A	Shaft and driver assy (governor)-chrome plated	1	9N, 9NAN, 2N, 2NAN, 8N	39-47
9N 18182	Bearing (governor)-needle	1	9N, 2N, 8N	39-48
9N 18183	Seal (governor)-dust	1	9N, 2N, 8N	39-48
9N 18184	Bushing (governor)-thrust	1	9N, 2N, 8N	39-48
	356491-S Washer (bushing thrust)	1	9N, 2N, 8N	39-48
9N 18185-C	Body assy (governor)	1	9N, 2N, 8N	39-48
	40514-S Screw (governor body)-No.8-32 x .38"	2	2N, 2NAN, 8N	43-48
	355027-S Screw (governor body)-No.6-32 x .28"	2	9N, 9NAN, 2N, 2NAN	39-43
9NAN 18185-B	Body assy (governor)-for kerosene conversion	1	9NAN, 2NAN	39-47
9N 18186	Race assy (governor lower bearing)	1	9N, 2N, 8N	39-48
	356490-S Spacer (governor lower race)	1	9N, 2N, 8N	39-48
9N 18186-B	Race assy (governor lower bearing)	1	9N, 2N, 8N	39-48
9N 18187-A	Shaft assy (governor drive)-plated-use with 9N-18179-A	1	9N, 2N, 8N	39-48
	358081-S Ball-5/8"	4	9N, 2N, 8N	39-48
9N 18187-B	Shaft assy (governor drive)-unplated	1	9N, 2N, 8N	39-48
9N 18188-B	Race (governor)-upper	1	9N, 2N, 8N	39-48
9N 18189	Lever assy (governor)	1	9N, 2N, 8N	39-48
	357408-S Pin (lever)-link	1	9N, 2N, 8N	39-48
9NAN 18189	Lever assy (governor)	1	9NAN, 2NAN	39-47
9N 18190	Lever assy (governor manual)	1	9N, 2N	39-47
	355233-S7 Bolt (governor adjusting)-1/4"-28 x 3/4"	1	9N, 2N	39-47
	33921-S7 Nut (governor adjusting bolt)	1	9N, 2N	39-47
	34805-S7 Lockwasher	1	9N, 2N	39-47
9NAN 18190	Lever assy (governor manual)	1	9NAN, 2NAN	39-47
8N 18232	Link (governor manual control lever)	1	8N	48
8N 18190	Lever assy (governor manual)	1	8N	48
9N 18191-B	Base (governor ball bearing)	1	9N, 2N, 8N	39-48
9N 18192	Bearing (governor thrust)-ball	1	9N, 2N, 8N	39-48
9N 18194	Base (governor fork bearing)	1	9N, 2N, 8N	39-48
9N 18195	Clip (drive shaft)	1	9N, 2N, 8N	39-48
	356430-S Washer (governor ball shim stop)-to governor drive shaft -.440" x .68"	1	9N, 2N, 8N	39-48
9N 18196	Spring (governor lever)	1	9N, 2N, 8N	39-48
9N 18200-C	Governor assy	1	9N, 2N	39-47
9NAN 18200-B	Governor assy-kerosene conversion	1	9NAN, 2NAN	39-47
8N 18204	Governor assy	1	8N	48
	20488-S7 Bolt (governor assy to timing gear side cover)	1	9N, 9NAN, 2N, 2NAN, 8N	39-48
	34807-S7 Lockwasher (governor assy to timing gear side cover)	2	9N, 9NAN, 2N, 2NAN, 8N	39-48
	33800-S7 Nut (governor assy to timing gear side cover)	2	9N, 9NAN, 2N, 2NAN, 8N	39-48
9N 18215-C	Pipe (air cleaner to carburetor)	1	9N, 2N, 8N	39-48
9NAN 18215	Pipe (vaporizer air intake)	1	9NAN, 2NAN	39-47
9N 18222	Gear (governor drive)	1	9N, 2N, 8N	39-48
9N 18224	Pin (governor fork to lever shaft)	1	9N, 2N, 8N	39-48
8N 18232	Link (governor manual control lever)	1	8N	48
	357409-S Pin (governor manual lever link)	1	9N, 2N	39-47
9N 18235	Fork (governor)	1	9N, 2N, 8N	39-48
9N 18241	Shim (drive shaft ball stop)	as reqd	9N, 2N, 8N	39-48

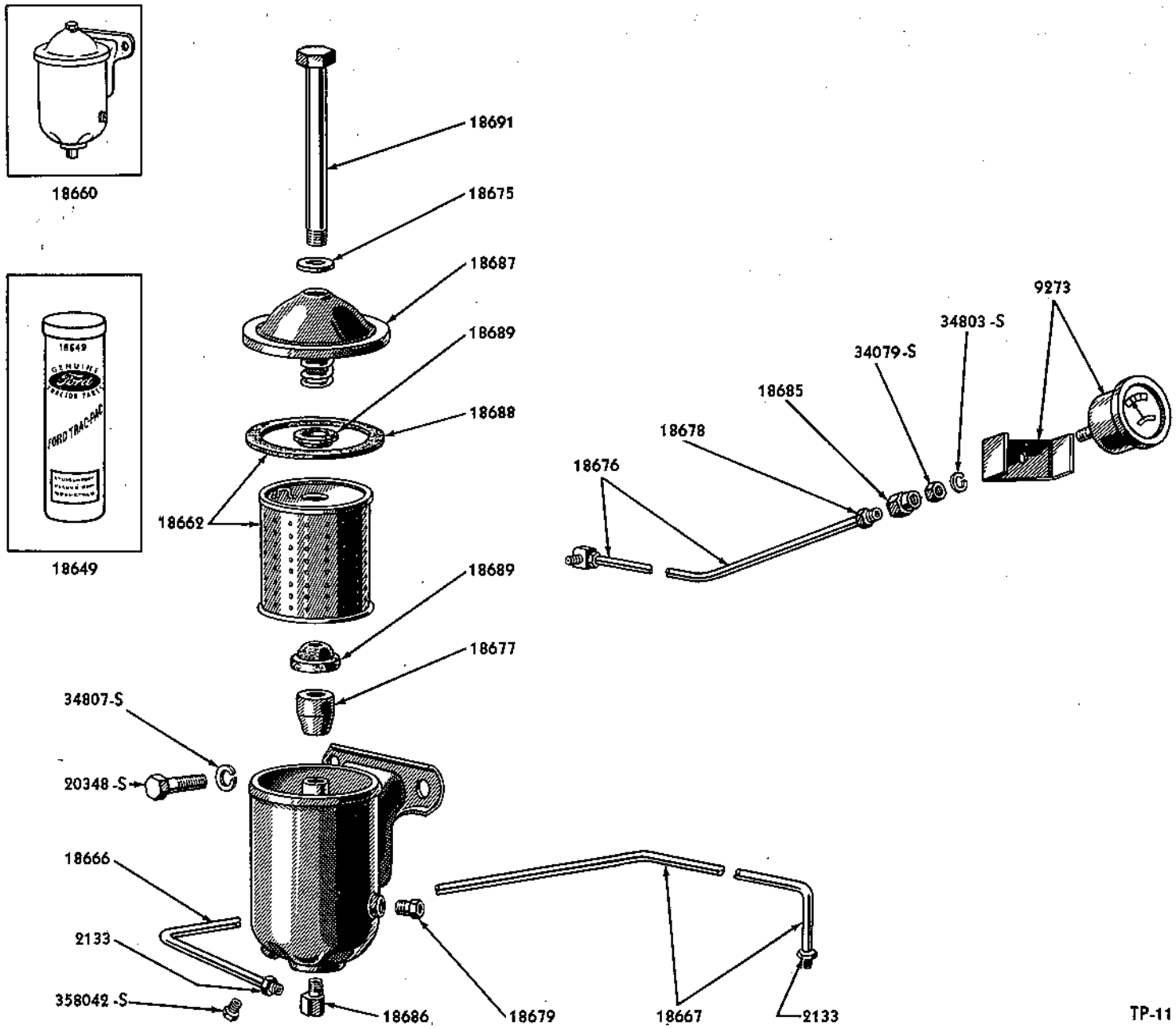

1939-48 OIL FILTER, OIL GAUGE AND RELATED PARTS

Basic numbers only shown on illustration. Order by Part Numbers shown in list of parts.

Ford

TRACTOR PARTS CATALOGUE

Oil Filter

PART NUMBER	PART NAME	NO. REQ'D	MODEL	YEAR 19—
9N 18354	Kit (distributor point)		Refer to Distributor Group	
9N 18438-B	Kit (lighting)		Refer to Headlamp Group	
9N 18649	Kit (oil filter cartridge)-Consists of the following 4-9N 18662 Cartridge	1	9N, 9NAN, 2N, 2NAN, 8N	39-48
9N 18660	Filter and bracket assy (oil)	1	9N, 9NAN, 2N, 2NAN, 8N	39-48
	358042-S Plug (oil filter drain)	1	9N, 9NAN, 2N, 2NAN, 8N	39-48
	20348-S7 Bolt (oil filter bracket to cylinder head)-3/8"-16 x 3/4"	2	9N, 9NAN, 2N, 2NAN, 8N	39-48
	34807-S7 Lockwasher (bracket to cylinder head)-3/8"	2	9N, 9NAN, 2N, 2NAN, 8N	39-48
9N 18662	Cartridge (oil filter)	1	9N, 9NAN, 2N, 2NAN, 8N	39-48
9N 18666	Tube assy (filter to block outlet)-1.96" x 1.5" x 78°	1	9N, 9NAN, 2N, 2NAN	39-47
2N 18666	Tube assy (filter to governor outlet)-18.5" long x .25" O.D.	1	2N, 2NAN, 8N	42-48
	91A 2133 Nut (oil line tube)	as reqd	9N, 9NAN, 2N, 2NAN, 8N	39-48
2N 18667	Tube assy (filter inlet)	1	9N, 9NAN, 2N, 2NAN	39-47
8N 18667	Tube assy (filter inlet)-9" x 10.75" x .250" O.D. x .190" I.D.	1	8N	48
9N 18668	Elbow (oil filter and oil gauge to block)	1	9N, 9NAN, 2N, 2NAN	39-47
01A 18675	Gasket (oil filter cover cap screw)	1	9N, 9NAN, 2N, 2NAN, 8N	39-48
9N 18676	Tube assy (oil pressure gauge)	1	9N, 9NAN, 2N, 2NAN	39-47
8N 18676	Tube assy (oil pressure gauge)	1	8N	48
9N 18677	Spacer (oil filter cartridge)	1	9N, 9NAN, 2N, 2NAN, 8N	39-48
9N 18678	Nut (oil gauge tube)	2	9N, 9NAN, 2N, 2NAN, 8N	39-48
9N 18679	Adapter (oil filter inlet)	1	9N, 9NAN, 2N, 2NAN, 8N	39-48
9N 18685	Adapter (oil gauge tube)-3/8"-24 x .72" x 1/2"	1	9N, 9NAN, 2N, 2NAN	39-47
8N 18685	Adapter (oil gauge tube)-7/16"-24 x .81" x 1/2"	1	8N	48
9N 18686	Elbow (oil line)-outlet-filter to governor and filter to block	1	9N, 9NAN, 2N, 2NAN	39-48
9N 18686	Elbow (oil line)-outlet-filter to governor and filter to block	3	8N	48
9N 18687	Cover (oil filter)	1	9N, 9NAN, 2N, 2NAN, 8N	39-48
9N 18688	Gasket (oil filter cover)	1	9N, 9NAN, 2N, 2NAN	39-48
01A 18689	Gasket (oil filter cartridge)	2	9N, 9NAN, 2N, 2NAN, 8N	39-48
01A 18691-A	Screw (oil filter cover cap)	1	9N, 9NAN, 2N, 2NAN, 8N	39-48

Numerical List of Standard Parts

PART NUMBER	PART NAME
20108-S	3/8"-16 x 1 1/8" Hex Head Bolt
20229-S7	3/4"-24 x 2-1/2" Hex Head Bolt
20301-S7	1/4"-28 x 3/8" Hex Head Bolt
20302-S7	5/16"-18 x 3/8" Hex Head Bolt
20304-S7	1/4"-20 x 7/16" Hex Head Bolt
20305-S7	1/4"-28 x 7/16" Hex Head Bolt
20306-S7	5/16"-18 x 7/16" Hex Head Bolt
20308-S7	1/4"-20 x 1/2" Hex Head Bolt
20310-S7	5/16"-18 x 1/2" Hex Head Bolt
20311-S7	5/16"-24 x 1/2" Hex Head Bolt
20318-S7	5/16"-18 x 9/16" Hex Head Bolt
20325-S7	1/4"-28 x 5/8" Hex Head Bolt
20326-S7	5/16"-18 x 5/8" Hex Head Bolt
20336-S7	5/16"-18 x 11/16" Hex Head Bolt
20337-S7	5/16"-24 x 11/16" Hex Head Bolt
20346-S7	5/16"-18 x 3/4" Hex Head Bolt
20348-S7	3/8"-16 x 3/4" Hex Head Bolt
20356-S7	5/16"-18 x 13/16" Hex Head Bolt
20358-S	3/8"-16 x 13/16" Hex Head Bolt
20366-S2	5/16"-18 x 7/8" Hex Head Bolt
20366-S7	5/16"-18 x 7/8" Hex Head Bolt
20368-S7	3/8"-16 x 7/8" Hex Head Bolt
20369-S	3/8"-24 x 7/8" Hex Head Bolt
20378-S7	3/8"-16 x 15/16" Hex Head Bolt
20388-S2	3/8"-16 x 1" Hex Head Bolt
20388-S7	3/8"-16 x 1" Hex Head Bolt
20389-S	3/8"-24 x 1" Hex Head Bolt
20405-S7	1/4"-28 x 1-1/8" Hex Head Bolt
20408-S7	3/8"-16 x 1-1/8" Hex Head Bolt
20413-S7	1/2"-20 x 1-1/8" Hex Head Bolt
20418-S7	3/8"-16 x 1-3/16" Hex Head Bolt

PART NUMBER	PART NAME
20426-S7	5/16"-18 x 1-5/8" Hex Head Bolt
20428-S	3/8"-16 x 1-1/4" Hex Head Bolt
20487-S7	5/16"-24 x 1.62" Hex Head Bolt
20488-S7	3/8"-16 x 1-5/8" Hex Head Bolt
20672-S	9/16"-12 x 1-1/4" Hex Head Bolt
20873-S7	7/16"-20 x 1.06" Hex Head Bolt
20874-S7	7/16"-20 x .68" Hex Head Bolt
20876-S7	7/16"-20 x .88" Hex Head Bolt
20878-S7	7/16"-20 x 1.25" Hex Head Bolt
20878-S8	7/16"-20 x 1.25" Hex Head Bolt
20879-S7	7/16"-20 x 1.75" Hex Head Bolt
20880-S2	7/16"-20 x 1.38" Hex Head Bolt
20880-S7	7/16"-20 x 1.38" Hex Head Bolt
20880-S34	7/16"-20 x 1.38" Hex Head Bolt
20881-S2	7/16"-20 x 1.56" Hex Head Bolt
20881-S7	7/16"-20 x 1.56" Hex Head Bolt
20882-S7	7/16"-20 x 2.25" Hex Head Bolt
20883-S7	7/16"-20 x 2.12" Hex Head Bolt
20885-S7	7/16"-20 x 2.56" Hex Head Bolt
20886-S7	7/16"-20 x 3.32" Hex Head Bolt
20887-S7	7/16"-20 x 3" Hex Head Bolt
20889-S7	7/16"-20 x 5.00" Hex Head Bolt
20892-S7	7/16"-20 x 1-1/8" Hex Head Bolt
20892-S34	7/16"-20 x 1-1/8" Hex Head Bolt
20894-S7	7/16"-20 x 1.68" Hex Head Bolt
21173-S7	5/8"-18 x 1.68" Hex Head Bolt
21182-S7	5/8"-18 x 1.88" Hex Head Bolt
21191-S7	5/8"-18 x 5.312" Hex Head Bolt
21192-S7	5/8"-18 x 6.12" Hex Head Bolt
21440-S7	7/16"-14 x .75" Hex Head Bolt
21441-S7	7/16"-14 x 1.25" Hex Head Bolt

Ford

TRACTOR PARTS CATALOGUE

PART NUMBER	PART NAME
21442-S	7/16"-14 x 1.38" Hex Head Bolt
21442-S7	7/16"-14 x 1.38" Hex Head Bolt
21443-S7	7/16"-14 x .94" Hex Head Bolt
21445-S7	7/16"-14 x 1.62" Hex Head Bolt
21446-S7	7/16"-14 x 2.50" Hex Head Bolt
21447-S7	7/16"-14 x 1.50" Hex Head Bolt
21449-S7	7/16"-14 x 2.62" Hex Head Bolt
21459-S7	7/16"-14 x 1.62" Hex Head Bolt
21464-S7	7/16"-14 x 3.31" Hex Head Bolt
21477-S	5/16"-18 x 1-5/8" Hex Head Bolt
21477-S7	5/16"-18 x 1-5/8" Hex Head Bolt
22185-S7	5/8"-18 x 5.56" Hex Head Bolt
22201-S7	5/16"-24 x 5/8" Hex Head Bolt-End Drilled
22228-S7	5/16"-24 x 1-1/4" Hex Head Bolt-End Drilled
22503-S	1/4"-20 x 5/8" Hex Head Bolt-Head Drilled
23017-S16	5/16"-18 x 1-1/4" Square Head Bolt
23423-S7	5/16"-18 x 1-1/8" Round Head Carriage Bolt
23439-S7	5/16"-24 x 1-1/2" Round Head Carriage Bolt
23458-S7	7/16"-20 x 1-3/8" Round Head Carriage Bolt
23554-S7	5/8"-18 x 2-1/2" Round Head Carriage Bolt
24327-S7	5/16"-24 x 5/8" Hex Head Bolt-Pointed
24626-S7	5/16"-18 x 7/16" Flat Head Machine Screw
25231-S7	No.10-32 x 1/2" Flat Head Machine Screw
25620-S7	5/16"-24 x 7/8" Hex Head Bolt-End Drilled
26456-S7	No.6-32 x 1/4" Round Head Machine Screw
27161-S7	No.10-32 x 1-1/4" Round Head Machine Screw
28319-S7	No.12-24 x 3/8" Oval Head Machine Screw
30334-S7	No.8-32 x 3/16" Fillister Head Mach.Screw
31027-S7	No.8-32 x 3/16" Fillister Head Mach.Screw
31032-S7	No.8-32 x 1/4" Fillister Head Mach.Screw
31061-S7	No.8-32 x 1/2" Fillister Head Mach.Screw
31077-S7	No.8-32 x 5/8" Fillister Head Mach.Screw
31583-S7	No.10-32 x 1/4" Fillister Head Mach.Screw
31590-S	1/4"-28 x 5/16" Fillister Head Mach.Screw
31596-S	No.10-32 x 3/8" Fillister Head Mach.Screw
33055-S7	No.12-24 x 1/2"Flat Hd.Screw-Self Tapping
33785-S7	3/8"-16(.336"x.562") Hex Nut
33787-S7	7/16"-20(3/4" x 5/8") Hex Nut
33789-S7	7/16"-20(.259"x.675") Hex Check Nut
33790-S7	7/16"-20(.259"x.675") Hex Check Nut
33791-S	7/16"-20(.384"x.688") Hex Nut
33791-S18	7/16"-20(.384"x.688") Hex Nut
33792-S	7/16"-20(.370"x.680") Hex Nut
33792-S7	7/16"-20(.370"x.680") Hex Nut
33792-S18	7/16"-20(.370"x.680") Hex Nut
33794-S7	7/16"-20(.453"x.670") Hex Nut
33794-S34	7/16"-20(.453"x.670") Hex Nut
33795-S7	1/4"-20(15/16"x7/16") Hex Nut
33796-S7	1/4"-28(7/32" x 7/16") Hex Nut
33797-S7	5/16"-18(1/4"x1/2") Hex Nut
33797-S16	5/16"-18(1/4"x1/2") Hex Nut
33798-S7	5/16"-24(17/64"x1/2") Hex Nut
33799-S	3/8"-16(.336"x.562") Hex Nut
33800-S	3/8"-24(21/64"x9/16") Hex Nut
33800-S7	3/8"-24(21/64"x9/16") Hex Nut
33806-S7	5/8"-18 (.625"x 1") Hex Nut
33806-S18	5/8"-18(.625"x 1") Hex Nut
33806-S34	5/8"-18(.625" x 1") Hex Nut
33816-S	7/16"-20(3/8"x5/8") Hex Nut-Brass
33817-S7	7/16"-20(.38"x.68") Hex Thin Nut
33825-S	5/16"18(.336"x .562") Hex Nut
33832-S7	1/2"-20(.448"x.750") Hex Nut

Ford

TRACTOR PARTS CATALOGUE

PART NUMBER	PART NAME
33855-S7	1"-8(.88"x 1.42") Hex Nut
33860-S	5/8"-18(.55"x 1.050") Castle Nut
33860-S7	5/8"-18(.55"x 1.050") Castle Nut
33860-S18	5/8"-18(.55"x 1.050") Castle Nut
33879-S7	5/16"-24(.328"x.500") Hex Nut
33881-S7	7/16"-20(.453"x.625") Hex Nut
33911-S	3/8"-24(15/64"x 9/16") Hex Check Nut
33921-S7	1/4"-28(5/32" x 7/16") Hex Check Nut
33923-S7	5/16"-24(3/16" x 1/2") Hex Check Nut
33925-S	3/8"-24(15/64"x 9/16") Hex Check Nut
33929-S7	1/2"-20(.323" x .750") Hex Check Nut
33935-S7	3/4"-16(3/8" x 1") Hex Check Nut
33948-S7	3/4"-10(.387" x 1") Hex Check Nut
33949-S7	3/4"-16(3/8" x 1") Hex Check Nut
33965-S	3/8"-24(21/64"x 9/16") Castle Nut
33965-S7	3/8"-24(21/64"x 9/16") Castle Nut
33967-S	7/16"-20(25/64"x 5/8") Castle Nut
34029-S7	5/16"-24(21/64" x 1/2") Castle Nut
34052-S7	No.8-32(1/8" x 11/32") Hex Nut
34065-S	No.8-32(.130" x .344") Hex Nut
34079-S	No.10-32(1/8" x 3/8") Hex Nut
34079-S7	No.10-32(1/8" x 3/8") Hex Nut
34141-S7	No.10-32(1/8" x 3/8") Square Nut
34320-S	No.1 5/8"-18 Clinch on Nut
34392-S16	5/8"-18(21/64" x 1/2") American Std.Light Locknut
34703-S7	No.10 (3/64" x 9/16") Flat Washer
34704-S7	No.12 (.054" x .563") Flat Washer
34705-S7	1/4" (5/8" x 3/4") Flat Washer
34706-S7	5/16" (1/16" x 7/8") Flat Washer

PART NUMBER	PART NAME
34707-S	3/8" (5/64" x 1") Flat Washer
34708-S7	7/16" (.82" x 1.25") Flat Washer
34745-S7	1/4" (1/16" x 5/8") Flat Washer
34746-S7	5/16" (1/16" x 11/16") Flat Washer
34748-S7	7/16" (.06" x .94") Flat Washer
34755-S	1/4" x 9/32" x 11/16" Flat Washer
34802-S7	No.8 (1/32" x 17/64") Lockwasher
34803-S	No.10 (1/32" x 21/64") Lockwasher
34803-S7	No.10 (1/32" x 21/64") Lockwasher
34804-S2	No.12 (1/16" x 5/16") Lockwasher
34805-S7	1/4" (1/16" x 15/32") Lockwasher
34806-S	5/16" (1/16" x 19/32") Lockwasher
34806-S7	5/16" (1/16" x 19/32") Lockwasher
34807-S	3/8" (9/32" x 21/32") Lockwasher
34807-S7	3/8" (9/32" x 21/32") Lockwasher
34808-S7	7/16" (1/8" x 25/32") Lockwasher
34809-S7	1/2" (7/64" x 7/8") Lockwasher
34810-S	9/16" (1/32" x 3/16") Lockwasher
34811-S7	5/8" (.160" x .636") Lockwasher
34813-S	3/4" (3/16" x 1-5/16") Lockwasher
34828-S	7/16" (.090" x .446") Lockwasher
34842-S7	No.8 (1/32" x 19/64") Lockwasher, Heavy
34843-S7	No.10 (.060" x .194") Lockwasher, Heavy
34902-S7	No.8 (.018" x .168") Internal Tooth Lock-Washer
34905-S	1/4" (1/64" x 15/32") Internal Tooth Lock-Washer
34906-S	5/16" (1/32" x 39/64") Internal Tooth Lock-Washer
34906-S2	5/16" (1/32" x 39/64") Internal Tooth Lock-Washer

Ford

TRACTOR PARTS CATALOGUE

PART NUMBER	PART NAME
34938-S7	No.8 (1/64" x 3/8") External Tooth Lock-Washer
35484-S7	5/16"-24 x 1/2" Thin Round Head Bolt
35516-S7	3/8"-24 x .62" Thin Round Head Pointed Bolt
38051-S	No.8-32 x 1/2" Brass Fillister Head Screw-Pointed
38631-S13	No.6-32 x 1/2" Binding Head Screw
39075-S7	5/16"-24 x 5/8" Binding Head Pointed Bolt
40514-S	No.8-32 x 3/8" Self Tapping Screw
41554-S7	No.8-32 x 3/8" Binding Head Self Tapping Screw
60006-S	5/32" x 3/16" Flat Head Solid Rivet
60160-S	3/16" x 1" Flat Head Solid Rivet
60414-S	1/4" x 3/4" Round Head Solid Rivet
60442-S	1/4" x 7/8" Round Head Solid Rivet
60453-S	3/16" x 15/16" Round Head Solid Rivet
60518-S	1/4" x 1-1/4" Round Head Solid Rivet
60530-S	1/4" x 1-3/8" Round Head Solid Rivet
60542-S	1/4" x 1-1/2" Round Head Solid Rivet
60577-S	5/16" x 1-7/8" Round Head Solid Rivet
60882-S	3/16" x 3/16" Oval Head Solid Rivet
60894-S7	5/16" x 3/16" Oval Head Solid Rivet
60915-S7	7/16" x 5/32" Oval Head Solid Rivet
61009-S	3/8" x 7/8" Oval Head Solid Rivet
61031-S	3/8" x 1" Oval Head Solid Rivet
61794-S	3/16" x 5/16" Solid Rivet-Wagon Box Head
61803-S	3/16" x 3/8" Solid Rivet-Wagon Box Head
63345-S7	3/16" x 7/16" Oval Head Tubular Rivet
63539-S	3/16" x 7/32" Oval Head Tubular Rivet
63797-S7	1/8" x 1/4" Oval Head Brass Tubular Rivet

PART NUMBER	PART NAME
72000-S5	1/2" x 1/8" Cotter Pin
72003-S	1/16" x 1/2" Cotter Pin
72003-S7	1/16" x 1/2" Cotter Pin
72005-S	1/8" x 1/2" Cotter Pin
72008-S	1/16" x 5/8" Cotter Pin
72009-S	3/32" x 5/8" Cotter Pin
72010-S	1/8" x 5/8" Cotter Pin
72010-S7	1/8" x 5/8" Cotter Pin
72016-S	3/32" x 3/4" Cotter Pin
72016-S7	3/32" x 3/4" Cotter Pin
72017-S	1/8" x 3/4" Cotter Pin
72017-S7	1/8" x 3/4" Cotter Pin
72025-S7	3/32" x 7/8" Cotter Pin
72026-S7	1/8" x 7/8" Cotter Pin
72034-S	3/32" x 1" Cotter Pin
72034-S7	3/32" x 1" Cotter Pin
72035-S7	1/8" x 1" Cotter Pin
72036-S7	5/32" x 1" Cotter Pin
72038-S7	7/32" x 1" Cotter Pin
72044-S	1/8" x 1-1/4" Cotter Pin
72052-S	3/32" x 1.25" Cotter Pin
72054-S	5/32" x 1.25" Cotter Pin
72062-S	1/8" x 1-3/8" Cotter Pin
72080-S	1/8" x 1-5/8" Cotter Pin
73298-S18	5/16" x 7/8" Dowel Pin
73304-S	3/16" x 15/16" Dowel Pin
73339-S	3/8" x 1-1/4" Dowel Pin
73339-S18	3/8" x 1-1/4" Dowel Pin
73902-S	3/16" x 1" Clevis Pin
73912-S7	3/8" x 1-1/16" Clevis Pin

PART NUMBER	PART NAME	PART NUMBER	PART NAME
73918-S7	5/16" x 1-1/8" Clevis Pin	74189-S	5/16" x 1-1/4" Woodruff Key
73924-S	1/4" x 1-3/16" Clevis Pin	74211-S	3/8" x .531" x .375" Plug Button
73934-S	1/4" x 1-5/16" Clevis Pin	74211-S7	3/8" x .531" x .375" Plug Button
73936-S7	1/2" x 1-1/4" Clevis Pin	88113-S7	3/4"-20 x 5/8"-14 x 2-3/8" Screw Stud
73939-S	1/4" x 15/16" Clevis Pin	88146-S	5/16"-18 & 5/16"-24 x 2-13/16" Stud
73951-S7	1-3/8" x 1/2" Clevis Pin	88181-S	5/16"-18 & 5/16"-24 x 3-1/4" Stud
73956-S7	3/8" x 1-7/8" Clevis Pin	88371-S7	5/16"-18 & 5/16"-24 x 1-1/4" Screw Stud
73984-S	1/4" x 1-11/16" Clevis Pin	88383-S7	7/16"-14 & 7/16"-20 x 1-3/8" Screw Stud
74034-S	5/16" x 2-1/8" Clevis Pin	88398-S7	7/16"-14 & 7/16"-20 x 1-9/16" Screw Stud
74079-S7	1/2" x 2-5/8" Clevis Pin	88403-S	7/16"-14 & 7/16"-20 x 1-5/8" Screw Stud
74106-S	5/16" x .062" Expansion Plug	88413-S7	7/16"-20 & 7/16"-14 x 1-3/4" Screw Stud
74113-S	3/4" x .062" Expansion Plug	88423-S7	7/16"-14 & 7/16"-20 x 1-7/8" Screw Stud
74120-S	1-3/16" x .080" Expansion Plug	88528-S7	5/16"-18 & 5/16"-24 x 3-1/16" Screw Stud
74121-S	1-1/4" x .083" Expansion Plug	88531-S	5/16"-18 & 5/16"-24 x 3-1/4" Screw Stud
74127-S	1-3/4" x .080" Expansion Plug	88541-S7	7/16"-14 & 7/16"-20 x 3-3/8" Screw Stud
74156-S	1-1/8" x 1/4" Woodruff Key	89605-S	7/16"-14 & 7/16"-20 x 1-1/8" Screw Stud
74175-S	5/32" x 5/8" Woodruff Key	92073-S	No.2 1/2" Drive Screw
74186-S	1/4" x 1-1/8" Woodruff Key	97013-S	3/8"-24 x 2-1/2" Adjustable Clevis

Numerical List of Special Bolts, Pins, Washers, etc.

350023-S	5/16" x .64" Special Hex Head Bolt	350645-S	7/16"-20 x .84" Hex Head Bolt-Head Drilled
350024-S	No.10-32 x .62" Hex Head Bolt	350545-S7	3/8"-24 x 1.5" Hex Head Bolt
350073-S7	No.8-32 x 1/2" Fillister Head Screw and Lockwasher Assy	350617-S7	7/16"-20 x 1.25" Flat Head Bolt
350101-S7	No.10-32 x 1/2" Hex Head Slotted Screw	350362-S7	1/4"-20 x 2.62" Flat Head Bolt
350236-S	1/4"-28 x 7/16" Hex Head Bolt and Lockwasher Assy	350400-S	5/16"-24 x .61" Hex Head Bolt
350260-S	5/16"-24 x .75" Special Hex Head Bolt	350433-S7	5/16"-18 x .77" Hex Head Bolt
350260-S7	5/16"-24 x .75" Special Hex Head Bolt	350476-S7	5/16"-24 x .88" Carriage Bolt
350320-S7	1/4"-20 x .69" Binding Head Screw	350483-S7	5/16"-18 x 1.12" Flat Head Bolt

Ford

TRACTOR PARTS CATALOGUE

PART NUMBER	PART NAME
350719-S7	5/8"-18 x 2.68" Round Head Bolt
350761-S	7/16"-20 x .94" Carriage Bolt
350764-S	5/8"-18 x 1.38" Carriage Bolt
350782-S7	7/16"-20 x 1-1/8" Hex Head Bolt
350801-S7	7/16"-20 x 3.32" Square Head Bolt
350802-S7	7/16"-20 x 5.00" Square Head Bolt
350803-S7	5/16"-18 x 7/8" Bolt & Lockwasher Assy
350830-S7	No.8-32(.28" x .38") Round Nut
350836-AS7	.18-3/8" x 5/8" Speed Nut
350901-S7	7/16"-20 x 2" Hex Head Bolt
350920-S7	7/16"-20 x 3.25" Hex Head Bolt
350947-S7	5/16"-24 Hex Nut
350984-S7	5/16"-24 Wing Nut
350990-S7	5/16"-24 Wing Nut
350995-S7	5/16"-24(.50" x .20") Plug Nut
350996-S	5/16" x .62" Push-on Speed Nut
351001-S7	3/8"-24 (21/64" x 9/16") Hex Nut
351025-S7	7/16"-20 (11/16" x 7/16") Hex Nut
351047-S7	7/16"-20 Locknut
351065-S7	3/8"-24 (.56" x .38") Plug Nut
351068-S7	7/16"-20 x 1.88" Hex Head Bolt
351069-S7	7/16"-20 x 1.82" Hex Head Bolt
351090-S7	7/16"-20 (.60" x .680") Heavy Lock Nut
351103-S7	5/8"-18 (.94" x 1.06") Blind Nut
351114-S	11/16"-20 (1.06" x .94") Blind Nut
351117-S7	13/16"-20 (.22" x 1") Hex Nut
351119-S7	13/16"-28 (.24" x 1.06") Hex Nut
351129-S	3/4"-16 (1.23" x .58") Castle Nut
351217-S7	1.06" (.25" x .30") External Tooth Lock-washer
351242-S7	.330" I.D. x .550" O.D. Flat Washer
351260-S	.187" x .310" x .020" Plain Brass Washer
351360-S7	5/16" (1/32" x 3/4") Flat Washer
351385-S7	3/8" x 3/32" Flat Washer

PART NUMBER	PART NAME
351402-S	13/32" I.D. x 1.5" O.D. Flat Washer
351406-S	13/32" I.D. x 1-1/2" O.D.Flat Washer
351428-S7	7/16" (1/8" x 29/32") Flat Washer
351436-S	7/16" (25/32" x 1-1/4") Lockwasher
351436-S7	7/16" (25/32" x 1-1/4") Lockwasher
351500-S7	5/8"-1 (1-1/16" x 1-9/16") Lockwasher
351500-S24	5/8"-1 (1-1/16" x 1-9/16") Lockwasher
351502-S	1" x .089" Flat Washer
351505-S7	5/8" (5/32" x 1-1/4") Flat Washer
351544-S7	15/16" x 1-1/2" Lockwasher
351926-S	5/32" x 3/16" Flat Countersunk Rivet
351927-S7	.72" x .152" Flat Head Rivet
351963-S	3/16" x .94" Oval Head Rivet
351966-S	3/16" x 3/8" Flat Head Rivet
351978-S	3/16" x 15/32" Flat Head Tubular Rivet
352150-S	7/16" x 1-1/2" Rose Head Rivet
352200-S	3/8" x .043" Cotter Pin
352201-S	3/64" x .31" Cotter Pin
352250-S	.11" x .68" Cotter Pin
352269-S7	1/8" x .83" Clevis Pin
352472-S7	1.38" x .120" Rivet Pin
352547-S	.274" x .98" Clevis Pin
352581-S7	5/16" x 1-1/2" Flat Head Pin
352584-S	5/16" x 1-1/2" Flat Head Pin
352592-S	3/8" x 1-1/4" Clevis Pin
352625-S7	.705" x 2.0" Clevis Pin
352648-S	.58" x .25" Drilled Straight Pin
352660-S	7/32" x .660" Straight Pin
352664-S7	3/8" x 7-1/4" Hinge Pin
353027-AS7	1/8" x 45/64" x 3/16" Lubricator Fitting
353043-AS7	1/4" x 28 Lubricator Fitting Short
353052-S5	1/8" x 3/8" Pipe Plug
353055-S	1/4"-18 Pipe Plug

PART NUMBER	PART NAME
353064-S7	1/2" Pipe Plug Extended Head
353075-S	3/8" Steel Ball
353076-S	1/4" Steel Ball
353080-S	.187" Steel Ball
353110-S	.281" Steel Ball
355000-S19	No.4-36 x .25 Round Head Screw
355001-S7	No.4-36 x 3/16" Round Head Screw
355016-S7	No.6-32 x 5/16" x 3.12" Fillister Hd.Screw
355027-S	No.6-32 x .28" x .25" Flat Head Screw
355043-S7	No.8-32 x 3/16" Screw & Lockwasher Assy
355048-S7	No.8-32 x .22" Screw & Lockwasher Assy
355147-S7	No.10-32 x 5/16" Screw
355233-S7	1/4"-28 x .75" Hex Head Bolt
355245-S7	No.12-24 x .62" Fillister Head Screw
355305-S	1/4"-28 x 1/4" Headless Slotted Screw
355471-S7	5/16"-24 x .75" Special Carriage Bolt
355472-S7	5/16"-24 x .56" Carriage Bolt
355545-S	3/8"-16 x 1.25" Hex Head Bolt
355596-S	7/16"-20 x 1" Carriage Bolt
355650-S	1/2"-20 x .50" Hex Head Bolt
355693-S7	7/16"-14 x 1-3/8" Hex Head Bolt
355729-S7	7/16"-20 x 1.50" Carriage Bolt
355767-S7	7/16"-20 x 1.12" Carriage Bolt
355870-S	.20" I.D. x 3/8" x .75" Speed Nut
355924-S7	1/4"-28 Wing Nut
355940-S7	1/4"-20 Wing Nut
355959-S	5/16"-18 (.50" x 9/32") Hex Nut
356034-S7	7/16"-20 (3/4" x 9/32") Square Nut
356051-S	1/2"-20 (.44" x .69") Hex Nut
356083-S7	1/2"-20 (.44" x .68") Hex Nut
356084-S7	1/2"-20 (.45" x .69") Hex Nut
356087-S7	5/8"-18 Self Locking Nut
356095-S2	.812" x .686" I.D. x 1.06" O.D. Speed Nut
356181-S	No.4 (1/32" x 1/4") Lockwasher
356211-S7	1/4" (1/32" x 1/4") Flat Washer
356384-S7	11/16" x .4" x .050" Flat Washer
356390-S	.34" I.D. x .56" O.D. x .03" Flat Washer-Brass
356392-S7	.224"I.D. x .52" O.D. x .092" Stop Washer
356430-S	.440" I.D. x .68" O.D. x .05" Flat Washer
356432-S7	.45" I.D. x 1.18" O.D x .16" Shakeproof Washer
356490-S	.596"I.D. x .88" O.D. x .064" Spacer
356491-S	9/16" x 5/8" Thrust Washer
356515-S7	.70" x .08" x 1.50" Flat Washer
357154-S7	9/64" x .38" Button Head Rivet
357233-S	.3735" x 1.70" Dowel Pin
357244-S	1/16" x 1/2" Cotter Pin
357408-S	.81" x .158" Dowel Pin
357409-S	.40" x .158" Dowel Pin
357623-S7	5/8" Clevis Pin
357701-S	7/16"-14 & 7/16"-20 x 1-3/4" Stud
357708-S7	7/16"-14 & 7/16"-20 x 2.12" Screw Stud
357724-S7	7/16"-14 & 7/16"-20 x 1.86" Screw Stud
357990-S	.8926" x .50" Expansion Plug
358011-S7	1/8" x 7/16" x 23/32" Lubrication Fitting
358042-S	9/16" x 7/16" Brass Hex Head Plug
358043-S7	1/8" x 9/16" x 1/2" Pipe Plug
358061-S	3/8"-20 Pipe Plug
358072-S5	.180" Lead Ball
358081-S	5/8" Steel Ball
40-700546-A	Rubber Bumper

SPECIAL NOTE on Indexing of Bolts, Nuts, Screws, Washers, Rivets, etc.

Bolts, screws, studs and rivets are listed in order according to diameter thread and length.

For Example: 20308-S2 ¼"—20 x ½"—diameter ¼"—threads to one inch 20—length ½".

Nuts are listed according to inside diameter and thread.

For Example: 33795-S2 ¼"—20 ($\frac{7}{32}$" x $\frac{7}{16}$") inside diameter ¼"—threads to one inch 20—thickness $\frac{7}{32}$"—outside diameter across flats $\frac{7}{16}$".

Washers are listed according to size of hole.

For Example: 34705-S2 ¼" ($\frac{9}{16}$" x ¾") size of bolt on which used ¼"—thickness $\frac{1}{16}$"—outside diameter ¾".

Nuts, Bolts, Screws, Washers, and Rivets (Other Than Special) By Size

HEX HEAD BOLT

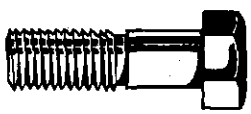

20108-S	3/8"-16 x 1-1/8"
20304-S7	1/4"-20 x 7/16"
20308-S7	1/4"-20 x 1/2"
20301-S7	1/4"-28 x 3/8"
20305-S7	1/4"-28 x 7/16"
20325-S7	1/4"-28 x 5/8"
20405-S7	1/4"-28 x 1-1/8"
20302-S7	5/16"-18 x 3/8"
20306-S7	5/16"-18 x 7/16"
20310-S7	5/16"-18 x 1/2"
20318-S7	5/16"-18 x 9/16"
20326-S7	5/16"-18 x 5/8"
20336-S7	5/16"-18 x 11/16"
20346-S7	5/16"-18 x 3/4"
20356-S7	5/16"-18 x 13/16"
20366-S2	5/16"-18 x 7/8"
20366-S7	5/16"-18 x 7/8"
20426-S7	5/16"-18 x 1-5/8"
21477-S	5/16"-18 x 1-5/8"
20311-S7	5/16"-24 x 1/2"
20337-S7	5/16"-24 x 11/16"
20487-S7	5/16"-24 x 1-5/8"
20348-S7	3/8"-16 x 3/4"
20358-S	3/8"-16 x 13/16"
20368-S7	3/8"-16 x 7/8"
20378-S7	3/8"-16 x 15/16"
20388-S2	3/8"-16 x 1"
20408-S7	3/8"-16 x 1-1/8"
20418-S7	3/8"-16 x 1-3/16"
20428-S	3/8"-16 x 1-1/4"
20488-S7	3/8"-16 x 1-5/8"
20369-S	3/8"-24 x 7/8"
20389-S	3/8"-24 x 1"
21440-S7	7/16"-14 x .75"
21443-S7	7/16"-14 x .94"
21441-S7	7/16"-14 x 1.25"
21442-S	7/16"-14 x 1.37"
21442-S	7/16"-14 x 1.38"
21447-S7	7/16"-14 x 1.50"
21445-S7	7/16"-14 x 1.62"
21459-S7	7/16"-14 x 1.62"
21446-S7	7/16"-14 x 2.50"
21449-S7	7/16"-14 x 2.62"
21464-S7	7/16"-14 x 3.31"
20874-S7	7/16"-20 x .68"
20876-S7	7/16"-20 x .88"
20873-S7	7/16"-20 x 1.06"
20892-S7	7/16"-20 x 1-1/8"
20878-S7	7/16"-20 x 1.25"
20878-S8	7/16"-20 x 1.25"
20880-S2	7/16"-20 x 1.38"
20880-S7	7/16"-20 x 1.38"
20881-S2	7/16"-20 x 1.56"
20881-S7	7/16"-20 x 1.56"
20894-S7	7/16"-20 x 1.68"
20879-S7	7/16"-20 x 1.75"
20883-S7	7/16"-20 x 2.12"
20882-S7	7/16"-20 x 2.25"
20885-S7	7/16"-20 x 2.56"
20887-S7	7/16"-20 x 3"
20886-S7	7/16"-20 x 3.32"
20889-S7	7/16"-20 x 5.00"
20413-S7	1/2"-20 x 1-1/8"
20672-S7	9/16"-12 x 1-1/4"
21173-S7	5/8"-18 x 1.62"
21182-S7	5/8"-18 x 1.88"
21191-S7	5/8"-18 x 5.31"
22185-S7	5/8"-18 x 5.56"
21192-S7	5/8"-18 x 6.12"
20229-S7	3/4"-24 x 2-1/2"

HEX HEAD BOLT-END DRILLED

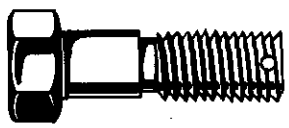

22201-S7	5/16"-24 x 5/8"
25620-S7	5/16"-24 x 7/8"
22228-S7	5/16"-24 x 1-1/4"

FILLISTER HEAD BOLTS-POINTED

38051-S	No.8-32 x 1/2"

HEX HEAD BOLT-HEAD DRILLED

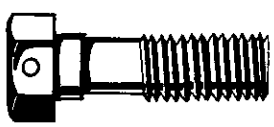

22503-S	1/4"-20 x 5/8"

HEX HEAD BOLT-POINTED

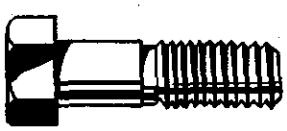

24327-S7	5/16"-24 x 5/8"

SQUARE HEAD BOLT

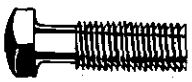

20317-S16	5/16"-18 x 1-1/4"

ROUND HEAD CARRIAGE BOLT

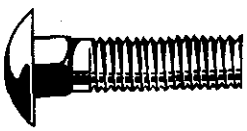

23423-S7	5/16"-18 x 1-1/8"
23439-S7	5/16"-24 x 1-1/2"
23458-S7	7/16"-20 x 1-3/8"
23554-S7	5/8"-18 x 2-1/2"

FLAT HEAD SCREW

23231-S7	No.10-32 x 1/2"
24626-S7	5/16"-18 x 7/16"

INTERNAL TOOTH LOCKWASHER

34902-S7	No.8(.018 x .168)
34905-S	1/4(1/64 x 15/32)
34906-S2	5/16 (1/32 x 5/8)

EXTERNAL TOOTH LOCKWASHER

34938-S7	No.8(1/64 x 3/8)

FLAT HEAD SOLID RIVET

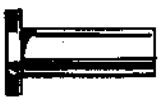

60006-S	5/32 x 3/16
60160-S	3/16 x 1

ROUND HEAD SOLID RIVET

60453-S	3/16 x 15/16
60414-S	1/4 x 3/4
60442-S	1/4 x 7/8
60518-S	1/4 x 1-1/4
60530-S	1/4 x 1-3/8
60542-S	1/4 x 1-1/2
60577-S	5/16 x 1-7/8

OVAL HEAD SOLID RIVET

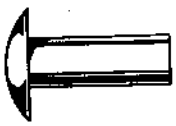

60882-S	3/16 x 3/16
61794-S	3/16 x 5/16
61803-S	3/16 x 3/8
60894-S7	5/16 x 3/16
61009-S	3/8 x 7/8
61031-S	3/8 x 1
60915-S	7/16 x 5/32

OVAL HEAD TUBULAR RIVET

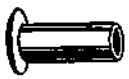

63797-S7	1/8 x 1/4
63539-S	3/16 x 7/32
63345-S7	3/16 x 7/16

COTTER PIN

72003-S	1/16 x 1/2
72008-S	1/16 x 5/8
72009-S	3/32 x 5/8
72016-S	3/32 x 3/4
72025-S7	3/32 x 7/8
72034-S	3/32 x 1
72034-S7	3/32" x 1"
72052-S	1/8 x 1/2
72005-S	1/8 x 1/2
72000-S5	1/8" x 1/2"
72010-S7	1/8 x 5/8
72017-S	1/8 x 3/4
72017-S7	1/8" x 3/4"
72026-S7	1/8 x 7/8
72035-S7	1/8 x 1
72044-S	1/8 x 1-1/4
72062-S	1/8 x 1-3/8
72080-S	1/8 x 1-5/8
72036-S7	5/32 x 1
72054-S	5/32 x 1.25
72038-S7	7/32 x 1

STRAIGHT PIN

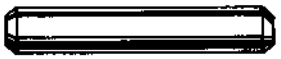

73304-S	3/32 x 15/16
73298-S18	5/16 x 7/8
73339-S	3/8" x 1-1/4"
73339-S18	3/8 x 1-1/4

CLEVIS PIN

73902-S	3/16 x 1
73939-S	1/4" x 15/16"
73934-S	1/4 x 1-5/16
73984-S	1/4 x 1-11/16
73918-S7	5/16 x 1-1/8
74034-S	5/16 x 2-1/8
73912-S7	3/8 x 1-1/16
73956-S7	3/8 x 1-7/8
73936-S7	1/2 x 1-1/4
73951-S7	1/2 x 1-3/8
74079-S7	1/2 x 2-5/8

EXPANSION PLUGS

74106-S	5/16 x .062
74113-S	3/4 x .062
74120-S	1-3/16 x .080
74121-S	1-1/4 x .080
74127-S	1-3/4 x .080

PLUG BUTTON

74211-S	3/8 x .531 x .375
74211-S7	3/8 x .531 x .375

WOODRUFF KEY

74175-S	5/32 x 5/8
74186-S	1/4 x 1-1/8
74189-S	5/16 x 1-1/4
74156-S	1-1/8 x 1/4

SCREW STUD

88371-S7	5/16-18 & 5/16-24 x 1-1/4
88146-S	5/16-18 & 5/16-24 x 2-13/16
88528-S7	5/16-18 & 5/16-24 x 3-1/16
88531-S	5/16-18 & 5/16-24 x 3-1/4
88181-S	5/16-18 & 5/16-24 x 3-1/4
89605-S	7/16-14 & 7/16-20 x 1-1/8
88383-S7	7/16-14 & 7/16-20 x 1-3/8
88398-S7	7/16-14 & 7/16-20 x 1-9/16
88403-S	7/16-14 & 7/16-20 x 1-5/8
88413-S7	7/16-20 & 7/16-14 x 1-3/4
88423-S7	7/16-14 & 7/16-20 x 1-7/8
88541-S7	7/16-14 & 7/16-20 x 3-3/8
88113-S7	3/4"-20 & 5/8-14 x 2-3/8

ROUND HEAD DRIVE SCREW

92073-S	No.2 1/2"

CLEVIS

97013-S	3/8-24 x 2-1/2

ROUND HEAD MACHINE SCREW

26456-S7	No.6-32 x 1/4"
27161-S7	No.10-32 x 1-1/4"

OVAL HEAD MACHINE SCREW

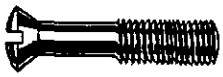

28319-S7	No.12-24 x 3/8"

FILLISTER HEAD SCREW

30334-S7	No.8-32 x 3/16"
31027-S7	No.8-32 x 3/16"
31032-S7	No.8-32 x 1/4"
31061-S7	No.8-32 x 1/2"
31077-S7	No.8-32 x 5/8"
31583-S7	No.10-32 x 1/4"
31596-S	No.10-32 x 3/8"
31590-S	1/4"-28 x 5/16"

BINDING HEAD SELF-TAPPING SCREW

38631-S13	No.6-32 x 1/2"
41554-S	No.8-32 x .38"
33055-S7	No.12-24 x 1/2"
35484-S7	5/16"-24 x 1/2"
39075-S7	5/16"-24 x 5/8"
35516-S7	3/8"-24 x .62"

REGULAR HEX NUTS

34065-S	No.8-32(.130 x.344)
34052-S7	No.8-32(1/8x11/32)
34079-S	No.10-32(1/8x3/8)
33795-S7	1/4-20(15/16x7/16)
33796-S7	1/4-28(7/32 x 7/16)
33797-S7	5/16-18(7/32x7/16)
33825-S	5/16-18(.336 x.562)
33798-S7	5/16-24(17/64x1/2)
33879-S7	5/16-24(.328x.500)
33799-S	3/8-16(.336x.562)
33785-S7	3/8-16(.340 x.60)
33800-S7	3/8-24(21/64x9/16)
33787-S7	7/16"-14(3/4"x5/8")
33816-S7	7/16-20(3/8 x 5/8)
33791-S	7/16-20(.384 x.688)
33791-S18	7/16-20(.384 x.688)
33881-S7	7/16-20(.453 x.625)
33794-S7	7/16-20(.453 x.670)
33794-S34	7/16-20(.453 x.670)
33789-S7	7/16-20(.259 x.675)
33792-S	7/16-20(.370 x.680)
33792-S7	7/16-20(.370x.680)
33792-S18	7/16-20(.370 x.680)
33832-S7	1/2-20(.448 x .750)
33806-S7	5/8-18(.625 x 1)
33855-S7	1"-8(.88 x 1.42)

HEX CHECK NUT

33921-S7	1/4-28(5/32x7/16)
33923-S7	5/16-24(3/16x1/2)
33925-S	3/8-24(15/64x9/16)
33911-S	3/8-24(7/32x9/16)
33790-S7	7/16-20(.259x.675)
33817-S7	7/16-20(.38 x .68)
33929-S7	1/2-20(.323x.750)
33948-S7	3/4-10(.387 x 1)
33935-S7	3/4-16 (3/8 x 1)
33949-S7	3/4-16(3/8 x 1)

CASTLE NUT

34029-S7	5/16-24(21/64x1/2)
33965-S	3/8-24(21/64x9/16)
33965-S7	3/8-24(21/64x9/16)
33967-S	7/16-20(25/64x5/8)
33860-S	5/8-18(.55 x 1)
33860-S7	5/8-18(.55 x 1)
33860-S18	5/8-18(.55 x 1)

SQUARE NUT

34141-S7	No.10-32(1/8x3/8)

CLINCH-ON NUT

34320-S	No.1 5/8"-18

AMERICAN STANDARD LIGHT LOCKNUT (MARSDEN)

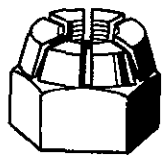

34392-S16	5/8-18(21/64x1/2)

FLAT WASHER

34703-S7	No.10(3/64 x 9/16)
34704-S7	No.12(.054 x .563)
34745-S	1/4(1/16 x 5/8)
34745-S7	1/4(1/16"x5/8")
34755-S	1/4 (9/32 x 11/16)
34705-S7	1/4 (1/16 x 3/4)
34746-S7	5/16(1/16 x 11/16)
34706-S7	5/16(1/16 x 7/8)
34707-S	3/8(5/64 x 1)
34748-S7	7/16(.06 x .94)
34708-S7	7/16(.82 x 1.25)

STANDARD LOCKWASHER

34802-S7	No.8(1/32 x 17/64)
34803-S7	No.10(1/32 x 21/64)
34804-S2	No.12(1/16 x 5/16)
34805-S7	1/4(1/16 x 15/32)
34806-S	5/16(1/16 x 19/32)
34807-S	3/8(9/32 x 21/32)
34808-S7	7/16(1/8 x 25/32)
34828-S	7/16(.090 x .446)
34809-S7	1/2(7/64 x 7/8)
34810-S	9/16(1/32 x 3/16)
34811-S7	5/8(.160 x .636)
34813-S	3/4(3/16 x 1-5/16)

HEAVY LOCKWASHER

34842-S7	No.8(1/32 x 19/64)
34843-S7	No.10(.060 x .194)

Ford

TRACTOR PARTS CATALOGUE

PART NUMBER	PART NAME	NO. REQ'D	MODEL	YEAR 19__
	Paints			
M 2822	Enamel (verimillion)		8N	48
M 2824	Enamel (black)		8N	48
M 2888	Enamel (grey)		9N, 9NAN, 2N, 2NAN	39-47
M 5318	Cement (brake dust seal)		9N, 9NAN, 2N, 2NAN, 8N	39-48
M 13243	Enamel (medium grey)		8N	48
	Miscellaneous Accessories			
9N 755	Guard (power take-off pulley)	1	9N, 9NAN, 2N, 2NAN, 8N	39-48
2N 1164	Extension with straps assy (steel wheel)	2	9N, 9NAN, 2N, 2NAN, 8N	39-48
2N 1169	Strap (wheel extension)	12	9N, 9NAN, 2N, 2NAN, 8N	39-48
	350764-S Bolt (extension to wheel)	12	9N, 9NAN, 2N, 2NAN, 8N	39-48
	351500-S7 Lockwasher (extension to wheel)	12	9N, 9NAN, 2N, 2NAN, 8N	39-48
	33806-S18 Nut (extension to wheel)	12	9N, 9NAN, 2N, 2NAN, 8N	39-48
	355767-S7 Bolt (strap to extension)	24	9N, 9NAN, 2N, 2NAN, 8N	39-48
	351436-S Lockwasher (strap to extension)	24	9N, 9NAN, 2N, 2NAN, 8N	39-48
	33792-S18 Nut (strap to extension)	24	9N, 9NAN, 2N, 2NAN, 8N	39-48
01A 12410-A	Gasket (spark plug)	4	9N, 9NAN, 2N, 2NAN, 8N	39-48
2N 12426	Adapter (spark plug)	1	9N, 9NAN, 2N, 2NAN, 8N	39-48
9N 17049	Cover (storm)-tractor	1	9N, 9NAN, 2N, 2NAN, 8N	39-48
9N 17052	Pump (tire)-power	1	9N, 9NAN, 2N, 2NAN, 8N	39-48
9N 17078	Jack (base and handle assy)	1	9N, 9NAN, 2N, 2NAN, 8N	39-48

Ford

TRACTOR PARTS CATALOGUE

Miscellaneous Kits

PART NUMBER	PART NAME	NO. REQ'D	MODEL	YEAR 19___
9N 489	Kit (hydraulic lift yoke and plunger)-Consists of the following 1-9N 541-C Plunger 1-9N 546-C Yoke	1	9N, 9NAN, 2N, 2NAN	39-47
8N 2007	Kit (brake lining)-Consists of the following 4-92Y 2021-A Lining 60- 351978-S Rivet	1	9N, 9NAN, 2N, 2NAN, 8N	39-48
9NAN 9502	Kit (vaporizer gasket)-Consists of the following 1-9NAN 9516 Gasket 1-9NAN 9519 Gasket 1-9NAN 9563 Gasket 1-9NAN 9569 Gasket	1	9NAN, 2NAN	39-48
9N 9502	Kit (carburetor gasket)-Consists of the following 1- 9N 9569 Gasket 1- 9N 9519 Gasket 1- 9N 9608 Gasket 1- 9N 9563 Gasket 1- 9N 9447 Gasket	1	9N, 9NAN, 2N, 2NAN, 8N	39-48
2N 10181	Kit (generator belt adjustment)-Consists of the following 1- 2N 10179 Clamp & Bracket 1- 2N 10177 Spring 1- 2N 10176 Bolt 1- 2N 10178 Bracket 1- 2N 10180 Nut 1- 72016-S7 C/Pin 1- 33965-S7 Nut 2- 20366-S7 Bolt 2- 34806-S7 Lockwasher 1- 33797-S7 Nut	1	9N, 9NAN, 2N, 2NAN	39-47
18 11057	Brushes (starter)-one set in carton-Consists of the following 2-18 11055 Brush 2-18 11056 Brush	1	9N, 9NAN, 2N, 2NAN, 8N	39-48
9N 17004	Kit (tool)-Consists of the following 1- B 17005-A Bag 1-01A 17015 Wrench 1-01A 17016 Wrench 1- B 17020 Screw Driver 1- B 17025-A Pliers	1	9N, 9NAN, 2N, 2NAN, 8N	39-48
9N 18354	Kit (distributor point)-Consists of the following 1- 9N 12162 Arm 1- 68 12219 Contact	1	9N, 9NAN, 2N, 2NAN, 8N	39-48
9N 18438-B	Kit (lighting)-Consists of the following 1-9N 9703 Knob 1-9N 11652 Switch 1-9N 11653-B Wiring 1-2N 13005-C Headlamp 1-2N 13006-C Headlamp 2-9N 13102 Reinf. 1-9N 13404 Lamp 1-9N 13470 Bracket 1-9N 13471 Bracket 1-2N 13472 Medallion 1-2N 13473 Medallion 1- B 14526 Fuse 2- B 14585 Clip 5- B 14586 Clip 3-9N 17667 Clip 9-9N 17668 Clip 4- 34806-S7 Lockwasher 2- 34809-S7 Lockwasher 2- 20303-S7 Bolt 1- 351001-S7 Nut 2- 356083-S7 Nut	1	9N, 9NAN, 2N, 2NAN, 8N	39-48
9N 18649	Kit (oil filter cartridge)-Consists of the following 4- 9N 18662 Cartridge	1	9N, 9NAN, 2N, 2NAN, 8N	39-48

Alphabetical Index

NOTE: All parts in this catalog are listed in numerical sequence. Where the function of a part causes it to be listed out of numerical order it is indented the same as attaching parts and appears again in numerical sequence.

Basic part numbers only are shown in the following "Alphabetical Index". Always refer to Parts Listings for complete Part Number. For example: The basic Part Number of a Crankshaft is 6303; by referring to Parts Listings you will find that 6303 appears numerically on page 53 where the crankshafts for the various models are shown.

Part Name	Basic Part No.
A	
Adapter (grease gun)	17128
Adapter (oil filter inlet)	18679
Adapter (oil gauge tube)	18685
Adapter (spark plug)	12426
Adapter (tank to tank support)	9126
Ammeter assy	10850
Ammeter & Temperature Indicator Group-Page 83	
Anchor (brake spring)	2027
Anchor (linch pin chain)	508
Anchor(lower link check chain)	596-7
Anti-rattler (fuel line)	9121
Arm (brake pawl)	2324
Arm (clutch release shaft)	7511
Arm (drawbar control)	680
Arm (drawbar control)	693
Arm (fan belt idler)	8681
Arm (front axle spindle)	3130-31
Arm (generator adjusting)	10145
Arm (hydraulic lift shaft)	543
Arm (hydraulic lift ram)	545
Arm (steering gear)	3590
Arm (throttle rod)	9805
Armature assy (generator)	10005
Armature assy (starter)	11005
Axle assy (front)	3006-07
Axle assy (front)	3010
B	
Bag (tool)	17005
Band (starter cover)	10142
Bar (battery clamp hold-down)	10728
Bar (battery clamp hold-down)	10748
Base (governor ball bearing)	18191
Base (governor fork bearing)	18194
Base (hydraulic pump)	604
Battery assy	10655-57
Battery Cables Group-Page 95	
Battery support	10732
Battery Group-Page 83	
Bearing (clutch pilot)	7600
Bearing (clutch release)	7580
Bearing (driving pinion pilot)	4625
Bearing (generator end plate)	10128
Bearing (front axle spindle)	3123
Bearing (generator front end)	10094
Bearing (governor)	18182
Bearing (governor thrust)	18192
Bearing (leveling gear)	554
Bearing (main shaft pilot)	7120
Bearing (power take-off)	712
Bearing (power take-off lever)	715
Bearing & Slinger (water pump)	8578
Bearing (starter end plate)	11052
Bearing (steering column)	3517
Bearing (steering gear worm)	3571
Bearing (water pump)	8530
Belt (fan)	8620
Block (cylinder)	6010
Block (driving gear thrust)	4194-95
Board (running)	16450
Board (running)	16472-73
Body (governor)	18185
Body (oil pump)	6603
Bolt (belt adjustment)	10176
Bolt (check chain)	587
Bolt (cut-out terminal)	10564
Bolt (generator thru frame)	10120
Bolt (idler pulley axle)	8686
Bolt (lug to wheel)	1155
Bolt (starter thru)	11091
Bolt(wheel disc to brake drum)	1117
Bolt (wheel to flange)	1117
Bolt (wheel hub)	1107
Bowl (sediment bulb)	9162
Box (hydraulic lift leveling)	569
Box (leveling gear)	565
Bracket (ammeter clamp)	10879
Bracket (belt adjustment)	10167
Bracket (belt adjustment)	10178
Bracket (brake camshaft)	2304
Bracket & clamp (muffler)	5252
Bracket (distributor contact)	12219
Bracket (fan belt idler)	8680
Bracket (fender lamp)	13470-71
Bracket (generator support)	10151
Bracket (indicator to dash)	10912
Bracket (muffler outlet pipe)	5260
Bracket (rear lamp)	13468
Bracket (running board)	16470-71
Bracket (shoe adjusting)	2040
Bracket (spark plug wire)	14564
Bracket (throttle control rod)	9796
Bracket (throttle shaft)	9824
Brake assy	2209-10
Brake Controls Group-Page 27	
Brake Arm (rear wheel)	1126
Brake Lining Kit	2007
Brake Pedal	2455-6
Brake rod	2465
Brakes Group-Page 23	
Brush (generator third)	10070
Brush assy (generator)	10069
Brush assy (starter)	11055-56
Bulb (rear lamp)	13466
Bulb (headlamp)	13007
Bulb (sediment)	9155
Bumper (grille to hood)	8033
Bus (solenoid to starter)	11518
Bushing (axle)	3039
Bushing (brake camshaft)	2227
Bushing (brake cross shaft)	2477
Bushing (clutch pedal)	7508
Bushing (clutch release shaft)	7508
Bushing (connecting rod)	6207
Bushing (draft control)	691
Bushing (governor)	18184
Bushing(hydraulic lift rocker)	4110
Bushing (hydraulic lift shaft)	531
Bushing (hydraulic pump valve)	625
Bushing (hydraulic pump valve)	695
Bushing (indicator bulb)	10931
Bushing (lower magneto flange)	12605
Bushing (magneto lower shaft)	12607
Bushing (magneto upper shaft)	12607
Bushing (oil pump body)	6612
Bushing (power take-off shaft)	649
Bushing (reverse idler gear)	7143
Bushing (sector shaft)	3576
Bushing (spindle)	3109
Bushing (steering sector)	3517
Bushing (upper magneto flange)	12606
Bushing (valve guide)	6510
Bushing(vaporizer cover plate)	9970
Bushing (vaporizer needle)	9604
Bushing (vaporizer needle)	9644
Bushing (vaporizing plate)	9967
Bushing (water pump housing)	8520
Button assy (starter switch)	11506

Alphabetical Index

Part Name	Basic Part No.
C	
Cable (starter solenoid)	14300
Cable (starter switch)	14300
Cable (switch to starter)	14431
Cam (drawbar control)	685
Cam (hydraulic pump)	618
Cam (hydraulic pump block)	617
Camshaft	6250
Camshaft (brake actuating)	2246-47
Camshaft Gear	6256
Cap (adjusting brake bracket)	2043
Cap (brake shoe hold-down)	2067
Cap (crankshaft center bearing)	6330
Cap (crankshaft rear bearing)	6325
Cap (front hub)	1139
Cap (fuel tank filler)	9030
Cap (oil filler)	6766
Cap (power take-off cover)	726
Cap (radiator pressure)	8100
Cap (steering column)	3669
Cap (transmission cover filler)	7485
Cap screw (oil filter cover)	18691
Carburetor assy	9510
Carburetor Repair Kit	9590
Carburetor Gasket Kit	9502
Carburetor, Vaporizer & Air Cleaner Group-Page 74	
Cartridge (oil filter)	18662
Case (differential gear)	4204
Case (power take-off seal)	728
Case (transmission)	7005
Cement (brake dust seal)	5334
Cement (felt to steel)	5334
Chain (linch pin)	505
Chain (upper linch pin)	573
Chain & anchor (upper link)	588
Chain & clevis (anchor)	598
Chain & wedge (drawbar)	5370
Chamber (hydraulic pump valve)	621-22
Chamber (vaporizer float)	9950
Chamber (vaporizer mixing)	9520
Chamber & plug (vaporizer)	9521
Clamp (air cleaner)	9628
Clamp (air cleaner hose)	9653
Clamp (ball return guide)	3544
Clamp (muffler)	5264
Clamp (muffler inlet pipe)	5251
Clamp (muffler shield)	5293
Clamp (valve chamber)	609
Clamp (water hose)	8287
Clamp & bracket assy	10179
Clamp & cover (battery)	5162
Cleaner assy (air)	9600
Clevis (leveling box assy)	582
Clip (choke rod)	9718
Clip (drive shaft)	18195
Clip (driver's seat to spring)	433
Clip (electric wiring)	14197
Clip (headlamp)	14585-86
Clip (headlamp)	17667-68
Clip (wiring)	2279
Clip (wiring)	14598
Clip & chain (linch pin)	583
Clutch Group-Page 65	
Clutch pressure plate	7563
Clutch disc	7550
Clutch pedal	7520
Cock (drain)	8115
Coil (generator field)	10175
Coil (ignition)	12024
Coil (starter field)	11083-85
Collar (axle shaft bearing)	4132
Collar (brake camshaft)	2248
Condenser assy	12300
Conduit & wire (spark plug)	12281
Cone (shaft to housing bearing)	3573
Cone & roller (axle bearing)	4221
Cone & roller (countershaft)	7066
Cone & roller (differential)	4221
Cone & roller (front hub)	1201
Cone & roller (front hub)	1216
Cone & roller (pinion bearing)	4621
Cone & roller (P.T.O. bearing)	752
Cone & roller (P.T.O. gear)	743
Cone & roller (P.T.O. shaft)	743
Cone & roller (shaft bearing)	7066
Cone & roller (trans. bearing)	7066
Connecting rod	6200
Connector (ground)	10037
Connector (headlamp)	14487
Connector (ignition switch)	14377
Connector (shaft to coupling)	7108
Connector (trans. countershaft)	7105
Countershaft (transmission)	7111
Coupling (magneto drive)	12608
Coupling (reverse gear)	7145
Coupling (sliding trans. shift)	7106
Cover (air cleaner)	9602
Cover (battery clamping)	10721
Cover (brake adjusting hole)	2092
Cover (brake camshaft hole)	2224
Cover (cylinder front)	6019
Cover (differential housing)	7158
Cover (distributor breaker)	12276
Cover (front axle dust)	3324
Cover (hood top battery)	16938
Cover (hydraulic lift housing)	501
Cover (oil filter)	18687
Cover (power take-off shaft)	733
Cover (sediment bulb)	9143
Cover (starter bore)	11004
Cover (starter cable terminal)	14321
Cover (starter switch)	11453
Cover (starter switch terminal)	11113
Cover (starter terminal)	11115
Cover (steering gear side)	3584
Cover (storm)	17049
Cover (timing gear side)	6017
Cover (transmission)	7211
Cover (valve chamber)	6520
Cover (vaporizing chamber)	9968
Cover (vaporizer float chamber)	9953
Cover (water pump)	8508
Cover & bearing cup (P.T.O.)	761
Cover & screw (air cleaner)	9661
Cover & tube (steering housing)	3509
Crank (starting)	17040
Crankshaft	6303
Crankshaft gear	6306
Cup (air cleaner oil)	9658
Cup (axle shaft bearing)	4222
Cup (brake shoe spring)	2071
Cup (countershaft bearing)	7067
Cup (driving pinion bearing)	4616
Cup (front wheel inner bearing)	1202
Cup (front wheel outer bearing)	1217
Cup (generator bearing oil)	10141
Cup (main drive gear bearing)	7067
Cup (main shaft bearing)	7067
Cup (power take-off bearing)	753
Cup (power take-off gear)	744
Cup (power take-off shaft)	744
Cup (steering gear bearing)	3552
Cup (steering worm bearing)	3552
Cut-out assy (generator)	10505
Cylinder assy	6011
Cylinder block	6010
Cylinder head	6050
Cylinder Head Gasket	6051
Cylinder (hydraulic lift)	510
D	
Differential assy (rear axle)	4201
Disc (clutch)	7550
Disc (lever to quadrant)	518
Disc (rear wheel)	1122
Distributor & Coil Group-Page 89	
Distributor & coil assy	12000
Distributor Point Kit	18354
Door (headlamp)	13045
Door (rear lamp)	13448
Dowel (cyl. block to trans.)	6397
Dowel (flywheel to crankshaft)	6387
Dowel (front cover)	6397
Dowel (generator end plate)	10088
Dowel (starter end plate)	10088
Drain Cock	8115
Drawbar	5182

Alphabetical Index

Part Name	Basic Part No.
Drawbar Stays Group-Page 49	
Drawbar Stay	5374-5
Drive shaft	4605
Drive (magneto)	12600
Drive (starter)	11350
Driver (screw)	17020
Driver's Seat Group-Page 1	
Drum (rear wheel brake)	1126
E	
Elbow (fuel line)	9697
Elbow (oil filter to block)	18668
Elbow (oil gauge to block)	6722
Elbow (oil line)	18686
Elbow & strainer (carburetor)	9553
Enamel (black)	2824
Enamel (medium gray)	13243
Enamel (vermillion)	2822
End assy (spindle arm)	3289-90
Engine Group-Page 52	
Equalizer (brake)	2030
Extension assy (steel wheel)	1164
F	
Facing (clutch disc)	7549
Fan assy	8600
Fan Belt	8620
Fan Pulley	8606
Fan Pulley	8610
Felt ring (brake dust seal)	2217
Felt (spring seat)	529
Fender assy	16312
Filter & bracket (oil)	18660
Float & lever (carburetor)	9550
Float & lever (vaporizer)	9550
Fly (carburetor choke)	9545
Fly (carburetor choke)	9549
Fly (carburetor throttle)	9585
Flywheel assy	6375
Fork (clutch release shaft)	7515
Fork (governor)	18235
Fork (hand lift control)	504
Fork (hydraulic lift rod)	585
Fork (power take-off shifter)	720
Fork (trans. reverse shifter)	7231
Fork(trans. 1st & 3rd shifter)	7230
Fork(trans. 2nd & 4th shifter)	7236
Fork(trans.2nd & rev. shifter)	7231
Fork (spring control)	540
Front Axle Group-Page 31	
Fuel Tank, Fuel Lines & Sediment Bulb Group-Page 71	
Funnel (air cleaner)	9684
G	
Gasket (air cleaner body)	9623
Gasket(axle bearing retainer)	4130
Gasket (rear axle housing)	4130
Gasket(axle housing to brake)	4130
Gasket (carb. to manifold)	9447
Gasket (carb. needle)	9563
Gasket(carb. pump check valve)	9608
Gasket (carb. throttle body)	9519
Gasket (carb. valve)	9569
Gasket(center housing to axle)	4035
Gasket (cyl. block to head)	6051
Gasket (cyl. front cover)	6020
Gasket(diff.to trans.housing)	4662
Gasket (gear shift housing)	7223
Gasket (governor to cover)	6022
Gasket (housing drain plug)	614
Gasket (hyd. cyl. to cover)	552-553
Gasket (hydraulic lift cover)	502
Gasket (link support plate)	523
Gasket (magneto drive)	12524
Gasket (magneto lower housing)	12143
Gasket (manifold)	9448
Gasket (oil filter cap screw)	18675
Gasket (oil filter cartridge)	18689
Gasket (oil filter cover)	18688
Gasket (oil pan)	6710-11
Gasket (oil pan drain plug)	6734
Gasket (oil pump cover)	6619
Gasket (oil relief valve nut)	6669
Gasket (power take-off cover)	747
Gasket (power take-off cover)	4129
Gasket (pump base to housing)	611
Gasket (quadrant to cover)	532
Gasket (rear lamp white lens)	13447
Gasket (sediment bulb)	9160
Gasket (shifter plate cover)	4131
Gasket (spark plug)	12410
Gasket (starter button)	12410
Gasket (starter switch)	11467
Gasket (starter switch)	11529
Gasket (starter switch)	12410
Gasket (steering gear housing)	3581
Gasket(timing gear side cover)	6018
Gasket (trans. brg. retainer)	7086
Gasket (trans. drain plug)	7011
Gasket (trans. filler cap)	7037
Gasket(upper to lower housing)	3593-94
Gasket (valve chamber to base)	613
Gasket (valve chamber cover)	6521
Gasket (vaporizer chamber)	9516
Gasket (vaporizer float)	9556
Gasket (vaporizer float cover)	9519
Gasket (vaporizer fuel valve)	9569
Gasket (vaporizer plug)	9563
Gasket (water pump)	8513
Gasket (water pump cover)	8507
Gauge & bracket (oil pressure)	9273
Gear (camshaft)	6256
Gear (countershaft)	7113
Gear (crankshaft)	6306
Gear (driving)	4203
Gear (flywheel starting)	6384
Gear (governor drive)	18222
Gear(hydraulic lever leveling)	568
Gear (magneto drive drive)	12603
Gear (magneto drive driven)	12604
Gear (main drive)	7017
Gear (oil pump)	6610
Gear (oil pump)	6614
Gear (rear axle driving)	4210
Gear (rear axle shaft diff.)	4236
Gear (reverse idler)	7139
Gear (reverse idler)	7144
Gear (trans. countershaft)	7112-14
Gear (trans. main shaft)	7110
Gear (trans. sliding)	7100
Gear (transmission sliding)	7101-02
Gear assy (steering)	3503
Gear & bushing (reverse idler)	7141
Gear & case assy (diff.)	4207
Gear Housing & Pulley (P.T.O.)	760
Gear set (P.T.O. matched)	713
Gear set (transmission)	7023
Gear & shaft (oil pump drive)	6608
Generator Group-Page 81	
Generator assy	10000
Generator Belt Adj. Kit	10181
Generator armature	10005
Generator brush	10069-70
Generator pulley	10130
Governor assy	18200
Governor assy	18204
Governor Group-Page 101	
Grille assy (radiator)	8204-06
Grommet (starter switch lead)	14605
Grommet (steering column)	3578
Guard (power take-off pulley)	755
Guide (power take-off spring)	730
Guide (steering ball return)	3523
Guide (valve chamber valve)	626
H	
Handle (drawbar control)	686
Handle & stud (battery cover)	16625
Head (cylinder)	6050
Headlamp assy	13005-06
Hinge (hood top battery cover)	16689
Holder (generator brush)	10051
Hood assy	16612

Alphabetical Index

Part Name	Basic Part No.
Hood Top & Side Panels Group-Page 98	
Hose (air cleaner outlet pipe)	9652
Hose (cyl. head to radiator)	8260
Hose (water pump to radiator)	8286
Housing & bearing cup (P.T.O.)	762
Housing & bushing (center)	4021
Housing (center)	4025
Housing (lower magneto drive)	12599
Housing (rear axle)	4010-11
Housing (rear axle shaft)	4012-13
Housing (steering gear)	3548
Housing (steering gear)	3550-51
Housing (upper magneto drive)	12598
Housing (water pump)	8518
Hub (clutch release bearing)	7561
Hub (power take-off clutch)	716
Hub & bolt (front wheel)	1104
Hub & stud (rear wheel)	1171
Hydraulic Lift Group-Page 6	
Hydraulic lift kit	489
Hydraulic pump exhaust valve	630
Hydraulic pump exhaust valve	640
Hydraulic pump intake valve	694
Hydraulic pump outlet valve	628
Hydraulic pump safety valve	638
Hydraulic pump valve	698

I

Part Name	Basic Part No.
Idler Group-Page 70	
Ignition Wiring Group-Page 90	
Ignition Wiring Group-Page 95	
Ignition Coil	12024
Impeller (water pump)	8512
Impeller (water pump)	8516
Indicator (heat)	10883
Indicator (oil level)	6750
Indicator (trans. oil level)	7137
Insert (exhaust valve seat)	6057
Insert (intake valve seat)	6057
Insulator (battery strap)	10726
Insulator (cut-out terminal)	10563
Insulator(generator end plate)	10208
Insulator(gen.terminal screw)	10206
Insulator (spark plug wire)	12278
Insulator (starter frame)	11107

J

Part Name	Basic Part No.
Jack (base and handle)	17078
Jet (carburetor fuel limiting)	9533
Jet (carburetor economizer)	9914
Jet (carburetor idle)	9596
Jet (vaporizer fuel)	9971

K

Part Name	Basic Part No.
Key (ignition)	3685
Key (wheel to shaft)	3609
Kit (brake lining & rivets)	2007
Kit (carburetor gasket)	9502
Kit (carburetor repair)	9590
Kit (distributor point)	18354
Kit (hydraulic lift)	489
Kit (lighting)	18438
Kit (oil filter)	18649
Kit (gen. belt adj.)	10181
Kit (stabilizer assy)	475
Kit (tool)	17004
Kit (vaporizer gasket)	9502
Knob (choke)	9703
Knob (light switch)	9703
Knuckle (leveling box)	566
Knuckle (rod to hyd. lift arm)	566

L

Part Name	Basic Part No.
Lamp & bracket (rear)	13404
Lamps Group-Page 93	
Latch (starter safety)	7229
Lens (headlamp)	13060
Lens (rear lamp)-white	13445
Lens (rear lamp)-red	13450
Lever (brake camshaft)	2315
Lever (choke control)	9700
Lever (gear operating)	594
Lever (gear shift)	7209
Lever (governor)	18189-90
Lever (hydraulic lift)	512
Lever (P.T.O. shifter)	723
Lever (starter push)	11515
Lever (throttle control rod)	9807
Lever (trans. gear shift)	7210
Lever (valve control)	643
Lever & rod (vaporizer)	9581
Lift (hydraulic)	500
Lighting Kit	18438
Line (fuel)	9282
Line (fuel)	9292
Liner (center main bearing)	6331
Liner (connecting rod bearing)	6211
Liner(front & rear main brg.)	6333
Lining (brake shoe)	2021
Link (brake shoe)	2042
Link (conn. draft control)	540
Link (drawbar control)	690
Link (governor control lever)	18232
Link (hyd. lower lift)	555-56
Link (stabilizer stay)	480
Link (steering drag)	3304-05
Link (upper)	576
Link (upper halves)	666
Lock (air cleaner toggle)	9612
Lock,cyl. & wire (ignition)	3679
Lock & cyl. (ignition)	3686
Lock (dowel & bolt)	7609
Lock (gear shifter)	7229
Lockwasher (hydraulic lift)	550
Lockwasher (pinion)	4636
Lug (wheel)	1158

M

Part Name	Basic Part No.
Magneto assy	12500
Magneto Group-Page 91	
Manifold Group-Page 71	
Manifold (intake & exhaust)	9425
Manifold (intake & exhaust)	9428
Medallion (headlamp mounting)	13472-73
Miscellaneous Accessories Group-Page 105	
Miscellaneous Kits Group-Page 104	
Muffler assy	5230
Muffler Group-Page 48	

N

Part Name	Basic Part No.
Needle(carb. idling adjusting)	9541
Needle (carb. main adjusting)	9565
Needle (vaporizer adjusting)	9565
Nozzle (carburetor main)	9530
Nut (bearing cap studs)	6348
Nut (belt adjustment)	10180
Nut (brake adjusting screw)	2223
Nut (connecting rod)	6212
Nut (driving pinion lock)	4634
Nut (fuel line tube)	2133
Nut (oil guage tuabe)	18678
Nut (oil relief valve)	6666
Nut (rear axle shaft)	4179
Nut (rear wheel bolt)	1134
Nut (sediment bulb thumb)	9167
Nut (steering gear ball)	3539
Nut (vaporizer outlet tube)	9959
Nut (wheel hub bolt)	1012

O

Part Name	Basic Part No.
Oil Filter Group-Page 103	
Oil Filter Kit	18649
Oil seal (gen. frt. end plate)	10212
Oil seal(gen. front end plate)	10122
Oil seal(main drive gear brg.)	7052
Oil seal (P.T.O.)	703

Alphabetical Index

Part Name	Basic Part No.
Oil seal (P.T.O. gear)	749
Oil seal (P.T.O. shaft)	750
Oil seal (rear axle housing)	4248
Oil seal(rear axle shaft brg)	4251
P	
Packing (carb. throttle shaft)	9622
Packing (cyl. block)	6347
Packing (oil pan & cyl. cover)	6700
Packing (steering gear sector)	3535
Packing (steering sector)	3670
Packing(vaporizer adj. needle)	9622
Pad (fuel tank support)	9067
Pad (radiator filler neck)	8032
Pad (radiator support)	8125
Paint (vermillion enamel)	2822
Paint (black enamel)	2824
Paint (grey enamel)	2888
Paint (medium grey enamel)	13243
Paints Group-Page 105	
Pan (engine oil)	6675
Panel (hood side)	16618-19
Panel (instrument)	3512
Pawl (brake)	2786
Pedal (brake)	2455-56
Pedal (clutch)	7520
Pin (brake shoe hold-down)	2069
Pin (control shaft brkt.)	9828
Pin (differential)	4256
Pin (front axle)	3126
Pin (gear shift lever)	7221
Pin (governor fork)	18224
Pin (knuckle to hyd. lift arm)	595
Pin (knuckle to leveling box)	595
Pin (knuckle to leveling rod)	595
Pin (linch)	574
Pin (piston)	6135
Pin (reverse idler gear shaft)	7155
Pin (spindle)	3122
Pin (starter pinion drive)	11365
Pin (throttle control lever)	9819
Pin (upper link to rocker)	560
Pin (vaporizer choke plate)	9972
Pin (vaporizer float lever)	9558
Pin (yoke)	486
Pinion (differential)	4215
Pinion (driving)	4609
Pinion & barrel(starter drive)	11367
Pinion & bearing (driving)	4608
Pipe (air cleaner to barb.)	18215
Pipe (muffler outlet)	5255
Pipe (oil filler)	6763
Pipe (vaporizer air intake)	18215
Piston	6110
Piston (hydraulic lift)	530
Piston (hydraulic pump)	615
Piston, pin & retainers	6108
Piston Pin	6135
Pivot (trans. shifter plate)	7238
Plate (battery cover)	10737
Plate (brake carrier)	2213
Plate (brake support)	2212
Plate (cut-out)	10597
Plate (drawbar control cam)	689
Plate (driver's seat hinge)	436
Plate (end brush)	10129
Plate (gear shift fork rod)	7225
Plate (generator end)	10050
Plate (generator front end)	10138
Plate (governor spring anchor)	9855
Plate (hand lift cover)	527
Plate (heat indicator warning)	10988
Plate (hyd. quadrant friction)	516
Plate (identification)	16600
Plate (lower link support)	562
Plate (magneto drive adapter)	12597
Plate (manifold vaporizer)	9966
Plate (P.T.O. shifter)	721
Plate (regulator mounting)	10673
Plate (starter brush end)	11049
Plate (starter rear end)	11130
Plate (starter spring anchor)	11372
Plate (trans. reverse shift)	7216
Plate (trans. 2nd & 4th shift)	7225
Plate (vaporizer air choke)	9964
Plate(vaporizer main air choke)	9545
Plate (vaporizing plate cover)	9969
Plate (vaporizer throttle)	9535
Plate & cover(clutch pressure)	7563
Plate & lever (friction)	514
Pliers	17025
Plug (battery filler)	10720
Plug (carb.strainer expansion)	9692
Plug (gen. brush end plate)	10146
Plug (hyd. pump valve chamber)	636
Plug (light switch hole)	11664
Plug (spark)	12405
Plug & screen (oil pan drain)	6730
Plug (trans. drain)	7010
Plug (vaporizer adj. needle)	9522
Plunger (draft control spring)	541
Plunger (oil relief valve)	6663
Power take-off assy	700
Power Take-Off Group-Page 15	
Pulley (crankshaft)	6312
Pulley (fan)	8606
Pulley (fan)	8610
Pulley (fan belt idler)	8679
Pulley (generator)	10130
Pulley (idler)	8678
Pulley (power take-off)	740
Pump (hydraulic)	600
Pump (tire)	17052
Pump (water)	8501
Push valve rod	6500
Q	
Quadrant (hydraulic)	515
Quadrant (throttle control)	9820
Quadrant (throttle control)	9889
R	
Race (driving pinion brg.)	4626
Race (governor)	18188
Race (governor lower brg.)	18186
Race (idler inner brg.)	8684
Race (idler outer brg.)	8685
Radiator assy	8005
Radiator Cap	8100
Radiator & Grille Group-Page 67	
Radius Rod (front)	3405
Radius rod ball cap	3440
Rail (P.T.O. shifter)	719
Rail (1st & 3rd shifter)	7240
Rail (trans. reverse shifter)	7242
Rail (2nd & 4th shifter)	7241
Ram arm (hyd. lift shaft)	545
Ratchet(carb. main adjustment)	9536
Ratchet (crankshaft)	6319
Ratchet(vaporizer adj. needle)	9536
Rear Axle Group-Page 43	
Reflector (headlamp)	13028
Regulator (generator)	10505
Reinforcement (headlamp brkt)	13102
Resistor (ignition coil)	12250
Retainer (battery cover hinge)	16651
Retainer (control lever)	520
Retainer (counter shaft brg.)	7134
Retainer (distributor cam)	12177
Retainer (distributor weight)	12212
Retainer (drawbar control arm)	687
Retainer (generator brg.)	10121
Retainer (gen. end plate)	10098
Retainer(main drive gear brg.)	7050
Retainer (main shaft brg.)	7085
Retainer (oil seal)	10214
Retainer (piston pin)	6140
Retainer (P.T.O. bearing)	734
Retainer(rear axle shaft brg.)	4133
Retainer (steering column oil)	3593
Retainer (steering gear)	3591
Retainer (steering gear)	3661
Retainer (steering linkage)	3336
Retainer (throttle rod spring)	9812
Retainer (throttle shaft)	9591
Retainer (valve guide bushing)	6512
Retainer (valve spring)	6514

Ford

TRACTOR PARTS CATALOGUE

Alphabetical Index

Part Name	Basic Part No.
Retainer (vaporizer shaft)	9976
Retainer & cup (rear axle)	4124
Rim (rear wheel)	1103
Ring (brake dust seal)	2252
Ring (camshaft gear locking)	6258
Ring (compression)	6150
Ring (driving pinion brg.)	4627
Ring (gen. brg. stop)	10163
Ring (gen. pulley retainer)	10096
Ring (hyd. lift piston)	533
Ring (oil control)	6153
Ring (P.T.O. seal)	731
Ring set (piston)	6149
Ring (starter drive)	11370
Ring (starter drive)	11373
Rocker (hydraulic lift)	535
Rod (brake)	2465
Rod (choke control)	9700
Rod (clutch release)	7334
Rod (connecting)	6200
Rod (drawbar control)	683
Rod (front radius)	3405
Rod (gear shift selector)	7240-41
Rod (governor to carb.)	9818
Rod (hyd. lift leveling)	564
Rod (piston connecting)	526
Rod (push valve)	6500
Rod (starter push)	11512
Rod (starter push lever)	11511
Rod (throttle control)	9805
Rod (throttle control)	9815
Rod (throttle shaft)	9815
Rod & yoke (clutch release)	7530
Rotor (distributor)	12200
Running board	16450
Running Boards & Fenders Group -Page 97	

S

Part Name	Basic Part No.
Screen (air cleaner)	9619
Screen (air cleaner funnel)	9669
Screen (sediment bulb)	9161
Screw (brake adjusting)	2041
Screw (carb. throttle adj.)	9610
Screw (cap)-oil filter cover	18691
Screw (gear case)	4216
Screw (generator terminal)	10211
Screw (pole piece)	10044
Screw & shaft (starter drive)	11366
Screw (trans. gear shifter)	7245
Screw (vaporizer air intake)	9963
Screw(vaporizer float chamber)	9957
Screw (vaporizer throttle)	9586
Screw driver	17020
Seal (camshaft rear brg.)	6266
Seal(crank shaft rear brg.oil)	6335
Seal (brake dust)	2255
Seal (fan belt idler pulley)	8683
Seal (front hub dust)	1190
Seal (gear shift lever dust)	7277
Seal (governor)	18183
Seal (P.T.O. bearing)	727
Seal (steering arm dust)	3528
Seal (steering gear column)	3570
Seal (steering gear dust)	3660
Seal (steering gear sector)	3586
Seal (steering linkage stud)	3332
Seal (water pump)	8551
Seal (water pump)	8564
Seat (driver's)	400
Seat (gear shift lever spring)	7223
Seat (hyd. lift spring adj.)	525
Seat (steering column brg.)	3518
Seat (trans. plunger spring)	7238
Seat (vaporizer fuel valve)	9567
Sector (brake pawl)	2796
Sector (steering gear)	3526-27
Sediment bulb	9155
Shaft & arm (clutch release)	7503
Shaft & ball nut (steering)	3575
Shaft (brake pedal cross)	2516
Shaft, cam & weights (dist.)	12187
Shaft (carb. float lever)	9558
Shaft (clutch release)	7510
Shaft (drive)	4605
Shaft & driver (governor)	18179
Shaft & flange (rear axle)	4234
Shaft (governor drive)	18187
Shaft (hyd. lever)	517
Shaft (hyd. lift)	544
Shaft (leveling gear)	579
Shaft & lever (carb. throttle)	9581
Shaft & lever (choke)	9546
Shaft (lower link support)	563
Shaft & pinion (steering)	3525
Shaft (P.T.O. pulley)	746
Shaft (rear axle)	4232
Shaft (rear axle)	4235
Shaft (reverse idler gear)	7140
Shaft & sleeve (P.T.O.)	710
Shaft (steering gear sector)	3526-27
Shaft (steering sector)	3540
Shaft (throttle control)	9802
Shaft (trans. main)	7061
Shaft (vaporizer air intake)	9962
Shaft (vaporizer air valve)	9975
Shield (muffler)	5290
Shim (camshaft gear)	6285
Shim (drive shaft ball stop)	18241
Shim (rear axle brg.)	4229
Shim (steering gear housing)	3595
Shim (trans. brg. retainer)	7135
Shoe & lining (brake)	2019
Shroud (fan)	8146
Skid band	1033
Sleeve & brg. cups (pinion)	4614
Sleeve (cylinder)	6055
Sleeve (driving pinion brg.)	4668
Sleeve (P.T.O. clutch)	717
Sleeve (power take-off)	735
Slinger (crank shaft oil)	6310
Slinger (water pump brg.)	8550
Snap ring (counter shaft)	7070
Snap ring (hyd. pump valve)	641
Snap ring (P.T.O. bearing)	754
Snap ring (rear axle nut)	4137
Snap ring (water pump brg.)	8531
Snap ring (water pump housing)	8576
Snap ring (water pump seal)	8574
Socket (brake screw)	2043
Socket (hyd. pump valve guide)	627
Socket (throttle)	9810
Socket & wire (headlamp)	13075
Spacer (fan belt idler)	8682
Spacer (front axle)	3024
Spacer (front axle)	3027
Spacer (front hub dust cap)	1191
Spacer (oil filter cartridge)	18677
Spacer (radius rod ball)	3442
Spacer (rear axle shaft)	4294
Spacer (starter drive)	11383
Spacer (starter motor)	11143
Spark plug	12405
Spider (differential)	4211
Spindle (front axle)	3105-06
Spring (air cleaner toggle)	9678
Spring (battery opening cover)	16948
Spring (belt adjustment)	10177
Spring (brake adjusting)	2296
Spring (brake camshaft hole)	2322
Spring (brake shoe hold-down)	2068
Spring (brake shoe retracting)	2297
Spring (brake shoe return)	2034-36
Spring (brake shoe secondary)	2299
Spring (carb. adj. screw)	9589
Spring (carb. choke retainer)	9539
Spring(carb.idle adj. needle)	9578
Spring(carb.main adj. needle)	9540
Spring (clutch release brg.)	7562
Spring (draft control)	539
Spring (drawbar control)	684
Spring (driver's seat)	404
Spring (dust seal)	3699
Spring (gear shifter lever)	7227
Spring (generator brush)	10057
Spring (governor compensating)	9827
Spring (governor lever)	18196
Spring (headlamp lens)	13061
Spring (headlamp reflector)	13031

Alphabetical Index

Part Name	Basic Part No.
Spring (hyd. check valve)	645
Spring (hyd. fork retraction)	539
Spring (hyd. inlet valve)	647
Spring (hyd. intake valve)	697
Spring(hyd.lift draft control)	547
Spring (hyd. outlet valve)	646
Spring (hyd. pump valve)	632
Spring (hyd. valve retainer)	644
Spring (oil relief valve)	6654
Spring (P.T.O. seal)	729
Spring (starter brush)	11059
Spring (starter drive)	11369
Spring (starter drive)	11375
Spring (starter drive meshing)	11368
Spring (steering column brg.)	3520
Spring (throttle control rod)	9806
Spring (trans. shifter fork)	7234
Spring (trans. shifter shaft)	7234
Spring (valve)	6513
Spring (vaporizer choke lever)	9624
Spring (vaporizer washer)	9540
Spring (water pump seal)	8560
Stabilizer Kit	475
Starter assy	11002
Starter brush	11055-56
Starter switch cable	14300
Starter & drive assy	11001
Starter & Drive Group-Page 85	
Starter drive	11350
Stay (drawbar)	5374-75
Steering Gear & Instrument Panel Group-Page 36	
Steering Linkage Group-Page 33	
Steering wheel	3600
Stem (brake adjusting)	2108
Stem (hyd. pump valve)	642
Stop (lever retainer)	521
Stop (P.T.O. rail)	722
Strainer (carb. lower body)	9694
Strap (battery to ground)	14301
Strap (extension to wheels)	1169
Stud (bearing cap)	6345-46
Stud (brake shoe spring)	2104
Stud (cyl. head)	6066
Support (battery)	10732
Support (battery & brkt.)	10732
Support (front axle)	3029
Support (grille)	8430
Support (instrument panel)	3532
Support (P.T.O. shaft)	718
Support (running board)	16486-87
Support (spring seat)	624
Support (starter cable)	14550
Support (starter safety latch)	7257
Switch (starter dash)	11450
Switch (starter solenoid)	11450
Switch (starter)	11500
Switch & wiring (lighting)	11652
Swivel (draft control)	692

T

Part Name	Basic Part No.
Tank assy (fuel)	9002
Terminal (starter field)	11102
Thermostat assy	8575
Tongue(hood top battery cover)	16656
Tool Kit	17004
Tool bag	17005
Tools Group-Page 99	
Transmission assy	7000-01
Transmission case	7005
Transmission Group-Page 58	
Trough (differential bearing)	4150
Tube (center housing oil)	567
Tube (filter to block outlet)	18666
Tube (filter to governor)	18666
Tube (filter inlet)	18667
Tube (oil pressure gauge)	18676
Tube (trans. oil level short)	7020
Tube (vaporizer primary air)	9960
Tube (vaporizer vapor outlet)	9958
Tube & screen cover(oil inlet)	6615
Tubing (fuel line)	2269

V

Part Name	Basic Part No.
Valve (exhaust)	6505
Valve guide bushing	6510
Valve (hydraulic pump)	698
Valve (hyd. pump exhaust)	630
Valve (hyd. pump exhaust)	640
Valve (hyd. pump inlet)	629
Valve (hyd. pump intake)	694
Valve (hyd. pump outlet)	628
Valve (hyd. pump safety)	638
Valve (intake)	6505
Valve (vaporizer air intake)	9961
Valve (vaporizer drain)	9523
Valve (vaporizer float)	9564
Valve (vaporizer fuel)	9566
Valve & gasket (carb. float)	9564
Valve & sediment bulb (fuel)	9155
Vaporizer assy	9510
Vaporizer gasket kit	9502
Vent (vaporizer float chamber)	9954
Venturi (carburetor)	9586
Venturi (vaporizer)	9586

W

Part Name	Basic Part No.
Washer (arm to shaft)	551
Washer (bearing retainer)	714
Washer (diff. gear thrust)	4228
Washer (diff. pinion thrust)	4230
Washer (distributor cam)	12179
Washer (drive shaft thrust)	7071
Washer (hub brg. retainer)	1195
Washer (lever to shaft)	522
Washer (pinion brg. thrust)	4667
Washer (P.T.O. case)	704
Washer (rear axle shaft)	4293
Washer (reverse idler thrust)	7148-49
Washer (starter armature)	11036
Washer(starter field terminal)	11094
Washer (starter terminal)	12213
Washer (steering gear housing)	3579
Washer(steering sector thrust)	3543
Washer(steering sector thrust)	3563
Washer (valve chamber cover)	12213
Washer (vaporizer adj. needle)	9643
Washer (water pump)	8557
Washer (water pump seal)	8557
Water pump	8501
Water Pump, Fan & Fan Belt Group-Page 68	
Wedge (brake adjusting)	2041
Wedge (brake operating shaft)	2050
Weight assy (distributor)	12188
Wheel	1015
Wheel bearing	1158
Wheels, Hubs & Rims Group-Page 21	
Wheel (steering)	3600
Wick (gen. end plate brg.)	10147
Wick(mag. drive oil reservoir)	12610
Wire (brush to terminal lead)	10036
Wire(dist.to spark plug)	12283-87
Wire (dowel retainer screw)	6383
Wire (headlamp ground)	13174
Wire (ignition switch)	14498
Wire (oil pump cover bolt)	6634
Wire (magneto to spark plug)	12283-87
Wire & screw (sediment bulb)	9166
Wiring (ignition lock)	14498
Wiring (lighting kit)	11653
Worm & shaft (steering gear)	3524
Wrench (adjustable)	17021
Wrench (open end)	17014-16
Wrench (spark plug & cyl.head)	17017

Y

Part Name	Basic Part No.
Yoke (control spring)	546

GENUINE

Ford

REG. U. S. PAT. OFF.

TRACTOR PARTS